Honda Research Institute EU
Honda Research Institute Europe GmbH
https://www.honda-ri.de/

Preference-based Topology Optimization for Vehicle Concept Design with Concurrent Static and Crash Load Cases

Nikola Aulig, Emily Nutwell, Stefan Menzel, Duane Detwiler

2017

Preprint:

This is an accepted article published in Journal of Structural and Multidisciplinary Optimization. The final authenticated version is available online at: https://doi.org/10.1007/s00158-017-1751-z

Structural and Multidisciplinary Optimization manuscript No.
(will be inserted by the editor)

Preference-based Topology Optimization for Vehicle Concept Design with Concurrent Static and Crash Load Cases

Nikola Aulig · Emily Nutwell · Stefan Menzel · Duane Detwiler

Received: date / Accepted: date

The final publication is available at https://link.springer.com/article/10.1007/s00158-017-1751-z

Abstract In the simulation-based design process of automotive structures, an increasing amount of multi-disciplinary requirements have to be considered. Methods of topology optimization can be used to devise structural concepts early in the design process to obtain the best possible structural layout as starting point for further development steps. Especially relevant for the vehicle design process is the concurrent consideration of static load requirements representing normal operating conditions and energy absorption requirements targeting passive safety in crash events. When the disciplines are considered separately, the heuristic Hybrid Cellular Automaton topology optimization is a suitable method. However, in practical applications, both disciplines are usually addressed sequentially. This complicates the overall process and may reduce the quality of the final optimization result, since optimization objectives may be conflicting. We propose a preference-based Scaled Energy Weighting approach to address the topology optimization of both disciplines concurrently. The main idea is to decouple the user preference from the scaling of the different magnitudes of energies. This enables a multi-objective optimization and ultimately the selection of the desired trade-off solution. We first validate the capability of the method to provide structures optimized for stiffness and energy absorption objectives on beam examples. Finally, the method is applied to optimize a concept structure of an industrial vehicle body, demonstrating its practical feasibility.

Keywords Topology optimization · hybrid cellular automata · crashworthiness · energy scaling · vehicle body design · multi-disciplinary

N. Aulig*, S. Menzel
Honda Research Institute Europe GmbH
Carl-Legien-Str. 30
63073 Offenbach/Main, Germany
*Tel.:+49(0)6989011757
*E-mail: nikola.aulig@honda-ri.de

E. Nutwell
Ohio State University SIMCenter
2132 Smith Laboratory
174 West 18th Street
Columbus, Ohio 43210, USA

D. Detwiler
Honda R&D Americas, Inc.
21001 State Route 739
Raymond, Ohio 43067-9705, USA

1 Introduction

A current challenge within the automotive industry is the increasing number of multi-disciplinary requirements that have to be considered in the vehicle design process. These involve classical requirements such as structural statics and dynamics or crashworthiness, but also for instance acoustics and electromagnetic compatibility (Duddeck, 2008). Combined with the pressure to shorten product cycles this leads to a replacement of physical prototypes and experiments by virtual models and simulations. In the virtual product design process, it is much easier to explore different designs and identify potential flaws or improvements long before the first physical entity is manufactured.

Besides improving the efficiency of the design process, it also enables computational design optimization with the overall target of lightweight vehicles that reduce the amount of required material, the manufacturing cost and the fuel consumption. Currently, the

paradigm of finding the best design for isolated requirements is changing in favour of interdisciplinary target settings. Cooperation between different experts, computational models, software tools and optimization methods is required to find the best trade-off depending on the preferences of engineers and designers.

Recent research in multi-disciplinary design optimization (Chuang et al, 2008; Kiani et al, 2013, 2015; Sala et al, 2016; Leotardi et al, 2016; Ryberg et al, 2015) aims mainly on conventional sizing or shape optimization problems where foci are meta-models in order to reduce the computational expense of the design evaluations or achieving robustness of the obtained solutions.

In industrial product development, optimization algorithms are applied at various steps of design maturation. However, providing efficient optimization methods of higher quality and performance at earlier design stages would allow higher design innovation potential. At the very beginning of the structural design development process, methods of structural *topology* optimization enable to devise a concept, i.e. a fundamental geometric layout or material distribution based on defined loads and design space (Bendsøe and Sigmund, 2004; Sigmund and Maute, 2013; Deaton and Grandhi, 2014). In recent years, topology optimization has seen an increased application, as it automatically provides designers with such optimized concepts.

In the future, topology optimization methods for the industrial vehicle design process are required to deal with a wide variety of requirements encountered in a multi-disciplinary environment. These methods need to provide strong engineering support to find optimal initial topology concepts in the sense of trade-off structures that can reduce the need for design changes in later stages. A simplified process flow of the virtual vehicle development process is shown in Fig. 1. The flow highlights both, concept-finding and succeeding fine tuning phases of the process.

In this work, the focus is on concept design via topology optimization of stiffness requirements under static loadings *concurrently* with energy absorption requirements under simplified crash loadings. The latter load cases, albeit simplified, enable to consider energy absorption for passive safety aspects already in the early concept phase of the design process. We propose an underlying algorithm that is able to heuristically devise a solution for the underlying optimization problem. Incorporation of these loadings in a concurrent optimization process is a step in the direction of a multi-disciplinary method for the virtual design concept process.

This paper is structured as follows. The next section, Section 2 introduces the general topology optimization problem and reviews related literature from the field of crashworthiness topology optimization. Subsequently, the applied Hybrid Cellular Automata algorithm for crashworthiness is described in Section 3. Section 4 formulates the addressed optimization as a multi-objective problem and proposes the Scaled Energy Weighting Hybrid Cellular Automaton (SEW-HCA) approach to address it. Finally, Section 5 presents and discusses results of case studies. At first, we confirm the assumed capabilities of SEW-HCA by optimizing a beam structure for stiffness and energy absorption in a multi-objective setting. Secondly, the practical feasibility is demonstrated by an optimization of a vehicle body concept with nine static and two crash load cases. The article is concluded in Section 6.

2 Topology Optimization for Crashworthiness

Crashworthiness considerations are an important part of the vehicle design process to fulfill passive safety requirements. Numerical simulations of crashworthiness events are able to reduce the number of expensive crash experiments with real prototypes. With increasing computational capabilities the desire to also optimize structures for crashworthiness rises. In contrast to sizing and shape optimization, *topology* optimization provides optimized *concepts* early in the design process.

Continuum topology optimization methods address the problem of finding the optimum distribution of material within a given design space. Different methods of topology optimization can be distinguished (Sigmund and Maute, 2013). Historical starting point for state of the art topology optimization is the homogenization method (Bendsøe and Kikuchi, 1988). The homogenization method models each element of a discretized design space as a parameterized microstructure. This lead to today's field of density-based approaches. Density-based approaches typically rely on material interpolation schemes that serve as microstructure model (Bendsøe, 1989; Zhou and Rozvany, 1991; Mlejnek, 1992). One of the most popular approaches is the Solid Isotropic Material with Penalization (SIMP) scheme that penalizes intermediate density values by a power law approach (Bendsøe and Sigmund, 2004). It relaxes the originally discrete problem to a continuous problem and enables the usage of gradient information.

For a discretized design space, the general, continuous topology optimization problem can be expressed with a density-based formulation as (Sigmund and Maute,

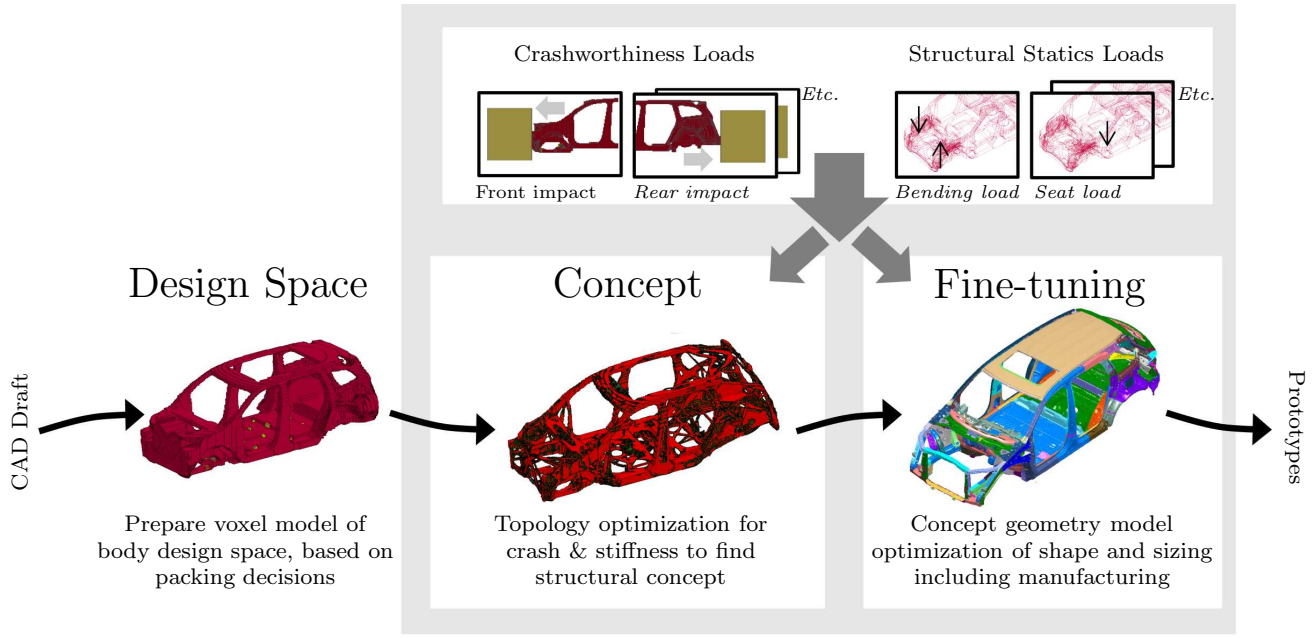

Fig. 1: A simplified illustration of the desired virtual design process considering crash and static load cases

2013):

$$\begin{aligned} &\min_{\boldsymbol{\rho}} \; F(\boldsymbol{\rho}, \mathbf{u}(\boldsymbol{\rho})) \\ &\text{s.t.} : G_0(\boldsymbol{\rho}) = \sum_i (v_i \rho_i) - V_0 \leq 0, \\ &\qquad G_j(\boldsymbol{\rho}, \mathbf{u}(\boldsymbol{\rho})) \leq 0, \;\; j = 1, \ldots, M, \\ &\qquad 0 \leq \rho_{\min} \leq \rho_i \leq 1, \;\; i = 1, \ldots, N \;\; , \end{aligned} \tag{1}$$

where $\boldsymbol{\rho}$ is the vector of elemental densities ρ_i (design variables) and v_i is the elemental volume. The minimum density $\rho_{\min}$ is introduced to avoid numerical problems, but depending on the computational model, minimum density elements can also be removed from the mesh. The optimization target is the minimization of the objective function $F(\boldsymbol{\rho}, \mathbf{u}(\boldsymbol{\rho}))$. The state vector $\mathbf{u}(\boldsymbol{\rho})$ is solved from the state equation associated with the optimization problem. The volume is restricted to V_0 by a constraint G_0. In the general case, there can be M additional constraints G.

When optimizing a limited number of parameters in sizing or shape optimization with global search algorithms, the specific nature of the objective function is of minor interest, as simulations are usually treated as black-box models. However, due to the high number of variables ($N \sim 10^3 \ldots 10^6$) in topology optimization problems, the type of objective function is of importance, since sensitivities, i.e. gradient information is required by the majority of algorithms. When gradients are available this type of problem can be addressed efficiently by general gradient-based optimization approaches such as Optimality Criteria methods or the Method of Moving Asymptotes (Bendsøe and Sigmund, 2004; Svanberg, 1987, 2002). When gradients are known, mathematical programming methods are able to address also multi-disciplinary problems, combining multiple constraints on compliances, displacements and frequencies (Yang, 1997).

Besides density-based approaches, the second major group of topology optimization approaches are Level Set Methods (van Dijk et al, 2013). In level set methods (Wang et al, 2003; Allaire et al, 2004), the boundary between material an void is defined implicitly by the contours of a level set function, composed of basis functions, for instance radial basis functions. This implicit parameterization provides a smooth and crisp boundary between material and void regions. In early level set methods the number of holes was fixed and not changed during the optimization. More recent methods based on topological derivatives enable to identify locations for introducing new holes, and thus a topological change in the design (Burger et al, 2004; Allaire and Jouve, 2006). Very recently there have been advances in evolutionary level set methods for crashworthiness by using geometric basis functions (Bujny et al, 2016a,b). These methods are able to optimize arbitrary objetive functions and show promising results. One drawback is that they rely on evolutionary optimization algorithms and are computationally rather expensive.

For many requirements in conventional design, loads are assumed to be applied over longer periods of times

and can hence be simulated with static finite element simulations. However, crash simulations involve phenomena such as multiple contacts, material and geometric non-linearities, strain-rate effects, friction and even failure of material. For significantly simplified crash models, it is possible to perform a gradient-based optimization with a so-called Ground Structure Approach (Pedersen, 2003a,b,c, 2004). However, its application to industrial use cases is limited. Besides the requirement of a ground structure (that may restrict variability of the resulting designs), we target optimization problems involving highly non-linear crash simulations that are usually provided as black-box simulation models. Due to the complexity of the simulation models, the adjoint sensitivity information required to perform a gradient-based topology optimization is not available in the general case and it is furthermore questionable if a conventional gradient-based search can yield satisfying results in face of the strong non-linearities and the numerical noise characterizing typical objective functions.

As consequence, heuristic approaches have been developed and are applied to tackle crashworthiness problems. A recent state-based representation approach proposes to cluster the design in a lower dimensional space of local state features, such as material and internal energy densities (Aulig and Olhofer, 2016). The material is re-distributed iteratively based on update-signal parameters optimized by an evolutionary strategy. This results in a generic method for a gradient-based optimization of complex problems. The method was successfully applied to the problem of minimizing intrusion of a structure subject to pole crash loading. Yet, the method requires repeated computationally expensive optimization steps and more application examples are required.

Equivalent Static Load methods model the non-linear crash loads by static loads. These can be found for instance by considerations on the stroke energy relations (Volz, 2011), by multiplication of the stiffness matrix of a linear static model with the displacements occurring in the non-linear crash analysis (Kang et al, 2001; Park, 2011) or based on inertial forces during the crash (Cavazzuti et al, 2011). Typically, a conventional topology optimization can be performed for the devised static load cases, possibly several times until convergence. However, it is unclear how much the static loads represent the actual crash loads and especially how closely the optimum of the objective function for the static load cases is related to the optimization of the actual crashworthiness objective function.

Schumacher et al. apply a set of heuristic rules to perform a graph-based topology optimization (Olschinka and Schumacher, 2008; Ortmann and Schumacher, 2013; Ortmann, 2015). It is based on topological changes followed by shape optimization. The topological changes are performed by rules such as 'Support Fast Deforming Walls' or 'Balance Energy Density'. However, the shape optimization requires a large number of evaluations of the crash simulation, which limits its practical application in an industrial environment. Furthermore, it has only been applied to optimization of thin-walled structures in a 2-dimensional scenario and is not suitable for identifying load paths in a 3-dimensional volumetric design space.

Another heuristic method is inspired by the idea of cellular automata. Cellular automata are state machines, in which cells are updated every iteration based on their state and the state of the neighbouring cells. A Hybrid Cellular Automaton (HCA) technique has been proposed by Tovar as a model for the remodelling process in human bones (Tovar, 2004; Tovar et al, 2006). It does not directly optimize a user-specified objective function, but instead the HCA process targets an equilibrium of the strain energy densities, similar to the concept of fully-stressed designs (Patnaik and Hopkins, 1998). When applied in a topology optimization setting, it is implicitly assumed that the target of a uniform energy distribution yields the desired result. In fact, when applied to linear elastic problems with static loads it yields minimum compliance structures, very similar to classical gradient-based topology optimization methods. Subsequently, this concept has been extended to a method for crashworthiness topology optimization by Patel (Patel, 2007; Patel et al, 2009). He showed that a uniform distribution of the internal energy densities can yield structures with favourable crashworthiness performance. Also, HCA has been compared to an inertia relief method, where both show promising results (Chuang and Yang, 2012).

The traditional approach is to apply the HCA to optimize a voxel-based design space representation as formulated in (1). This imposes limitations on modelling geometric non-linearities involving very large deformations, for instance like buckling and the formation of plastic hinges which cannot be modelled well by volume based elements. This can be accounted for by applying HCA to optimization of a thin-walled structure modelled by shell elements, enabling to consider also buckling effects (Hunkeler, 2013; Duddeck et al, 2016). Additional the traditional approach does not distinguish between structural domains to absorb kinetic energy and structural domains which have to be stiff during the crash phase. This issue has been considered in literature by a compliant mechanism approach for controlled behaviour (Bandi, 2012).

The HCA method for crashworthiness considers the non-linear crash simulations directly in the optimization process and usually provides a converged optimized design after a few dozens of evaluations. This high efficiency and the ability to include the non-linear crash simulations in the optimization process motivates the usage of HCA for the industrial design process. So far, HCA has been applied for the optimization of structures under crash (Patel et al, 2009) and static (Tovar et al, 2006) loading conditions *separately*.

In the following sections we present the basic HCA approach and augment it with a scaled weighting scheme that facilitates to address both static and crash loads in a single *concurrent* topology optimization. The approach is presented in the context of voxel-based methods, i.e. the density-based formulation, which implies the aforementioned shortcomings on the modeling of buckling and the sole consideration of energy absorption in the complete design space. However, in future work, an extension to the thin-walled HCA version proposed by Hunkeler (Hunkeler, 2013; Duddeck et al, 2016) and the controlled energy behaviour by Bandi (Bandi, 2012) are possible.

3 Hybrid Cellular Automata Algorithm

3.1 Optimization Method

The Hybrid Cellular Automata (HCA) algorithm is a numerical method that was originally developed for understanding the remodeling process in human bones, but can work as method for topology optimization. A cellular automaton is defined by a grid of cells, their state and a set of rules that are used to iteratively update the cell states based on neighbouring cells. For HCA, the cells usually coincide with the finite elements that discretize the design space.

The state of a cell is defined by the elemental density ρ_i and the field variable S_i. The latter is for instance given by the strain energy density in the design of stiff structures (Tovar et al, 2006), or elemental internal energy density in the design of crashworthiness structures by Patel (Patel, 2007). The HCA is a *hybrid* algorithm since the field variable implicitly contains *global* information obtained from the finite element analysis (analogous to adjoint sensitivities in gradient-based approaches). In the approach, Patel considers crash loadings of a design space discretized in cubic, voxel elements. The non-linear crash simulations that consider a contact between impactor and design space, as well as plastification of material are included directly in the optimization process. However, in this type of modelling, very large deformations as for instance occurring in buckling and resulting contacts cannot be modelled well with this approach.

The densities of the cells are updated by a control-based update rule aiming for an optimized material utilization by achieving an equilibrium, i.e. a uniform distribution of the field variables throughout the design space. While not strictly minimizing an objective function in a mathematical sense, this nevertheless leads to useful designs from an engineering perspective, based on the idea of distributing the load equally throughout the structure. This is implemented through iterative material redistribution with a control-based update.

An update of the cell states is obtained by determining the change in density by a control update. Although other controllers like proportional, integral and derivative control can be used (Tovar et al, 2007), we use the proportional controller as it requires only a single parameter that is easy to tune:

$$\Delta\rho_i^{(k)} = K_\mathrm{P}\left(\overline{S}_i^{(k)} - S^{*(k)}\right) \ , \tag{2}$$

where K_P is the proportional control parameter and S^* is a set-point for the field variables. A move limit m restricts the absolute value of $\Delta\rho_i$ to avoid instability of the optimization. The difference of the set-point to the effective field state $\overline{S}_i$ is the error signal so that the optimization is converged when the error is zero.

The effective field state is the average of the field states of the neighbouring elements, within a neighbourhood/filter radius r_min analogous to filtering of sensitivity approaches in topology optimization that are used to impose minimum length scale on the structure and tackle numerical instabilities like chequerboard patterns (Sigmund, 1994). Additionally, to account for the dynamic nature of the crash simulations, the state is smoothed by a weighted sum over previous iterations to increase stability of the optimization process.

A variable set-point S^* is chosen that enables to match the considered volume constraint. Hence, an internal loop adapts the set-point iteratively within each iteration k according to:

$$S^{*(j+1)} = S^{*(j)}\frac{V_f^{(k+1)}}{V_f*} \tag{3}$$

where j is the iteration of the internal loop, the volume fraction is defined as

$$V_f = \frac{1}{V_0}\sum_{i=1}^{N} v_i\rho_i \ , \tag{4}$$

and the volume fraction *target* is V_f^*. For $j = 0$ the set-point is the average of the field variable states over the design space. The update of the densities (2) is repeated until the targeted volume fraction holds, then it

is continued with the structural analysis of the $(k+1)$th iteration.

The iterative process is stopped when the change in the densities falls below a tolerance ε, i.e. when the following relation holds:

$$\sum_{i=1}^{N} \left(\left| \rho_i^{(k+1)} - \rho_i^{(k)} \right| \right) \leq \varepsilon \ . \tag{5}$$

3.2 Material Model

HCA uses a density material model based on the classical SIMP approach that defines intermediate values for the material by an interpolation function. Material parameters are interpolated according to (Bendsøe, 1989; Bendsøe and Sigmund, 1999):

$$E(\rho_i) = \rho_i^p E_0 \ , \tag{6}$$

with the penalization exponent p, the base material property E_0, the interpolated material property $E(\rho_i)$ and the elemental densities ρ_i. In typical cases of compliance minimization in static linear elastic cases, E_0 refers to the Young's modulus of the material. The interpolations with (6) then effect the stiffness matrix of the finite element model. SIMP as in (6) is a microstructure model, when the penalization is chosen within the Hashin-Shtrikman bounds for two-phase materials (Bendsøe and Sigmund, 1999).

Crashworthiness load cases require to take non-linear material behaviour into account that requires the interpolation of additional properties for modelling the stress-strain relation. For crash loads, a pure linear, elastic material model is not sufficient, since the structure is subject to plastic deformation. For application of HCA we consider the interpolation of a piecewise-linear elastic plastic material model used by Patel (Patel, 2007). In this case, the SIMP interpolation is extended to the yield stress σ_Y and the strain-hardening modulus E_h. The yield stress is the point on the stress-strain curve, behind which the material is deforming plastically. The strain-hardening modulus describes the slope of the strain-stress curve behind the yield point:

$$\sigma_\mathrm{Y}(\rho_i) = \rho_i^q \sigma_{\mathrm{Y}_0}, \tag{7}$$

$$E_{\mathrm{h}_j}(\rho_i) = \rho_i^p E_{\mathrm{h}_{0\,j}} \ , \tag{8}$$

with the yield stress σ_{Y_0} and the strain hardening modulus E_{h_0} of the full material and a penalization exponent q for the yield stress. Multiple sample points j of the plastic behaviour on the strain-stress curve can be used to define a more accurate piecewise linear elastic-plastic behaviour

Due to inertia playing a role in dynamic crash simulation also the actual volumetric mass density ϱ of the material model has to be interpolated:

$$\varrho(\rho_i) = \rho_i \varrho_0 \ . \tag{9}$$

This effects the mass matrix of the finite element model.

As long as static linear load cases remain in the elastic part of the strain-stress relation they are not effected by the non-linearity. Hence, in practise the same material model can be used. This is useful for the concurrent optimization approach introduced in the next section, since the non-linear material model may be used for both disciplines.

4 Concurrent Optimization Method

An important part of any numerical optimization procedure is to model engineering judgement by objectively quantifiable criteria. In this paper, we focus on combining the objective functions of stiffness maximization subject to static loadings as they occur during normal operation conditions with a maximization of energy absorption in the case of crash scenarios. As in the literature (Patel, 2007), the proposed method is limited to problems that mainly involve the design space and an impacting structure, where material plastification as well as large deformations (compared to linear elastic cases) are accounted for by a non-linear model. This implies that bending modes and corresponding tension and compression behaviour can be optimized. However, very large deformations as occurring in buckling or progressively folding structures and the involved contacts are not part of the considerations here.

Typically, these design targets are addressed by different experts that may work with very different software tools and analysis models. Here, we contribute with a novel method that is capable of performing the important step of topology optimization for both disciplines concurrently based on a consistent finite element model. Figure 2 shows the computational flow of the new method, which is introduced in the following.

At first, we formulate the framework, by defining the optimization targets mathematically. The minimum compliance (i.e. maximum stiffness) topology optimization problem can be stated as:

$$\begin{aligned} &\min_{\boldsymbol{\rho}} c(\boldsymbol{\rho}) = \ \mathbf{u}^T \mathbf{f} \\ &\text{subject to : } \mathbf{K}(\boldsymbol{\rho})\mathbf{u} = \mathbf{f}, \\ &\qquad\qquad V(\boldsymbol{\rho})/V_0 = V_f^*, \\ &\qquad\qquad 0 < \rho_\mathrm{min} \leq \rho_i \leq 1, \ i = 1, \ldots, N \ , \end{aligned} \tag{10}$$

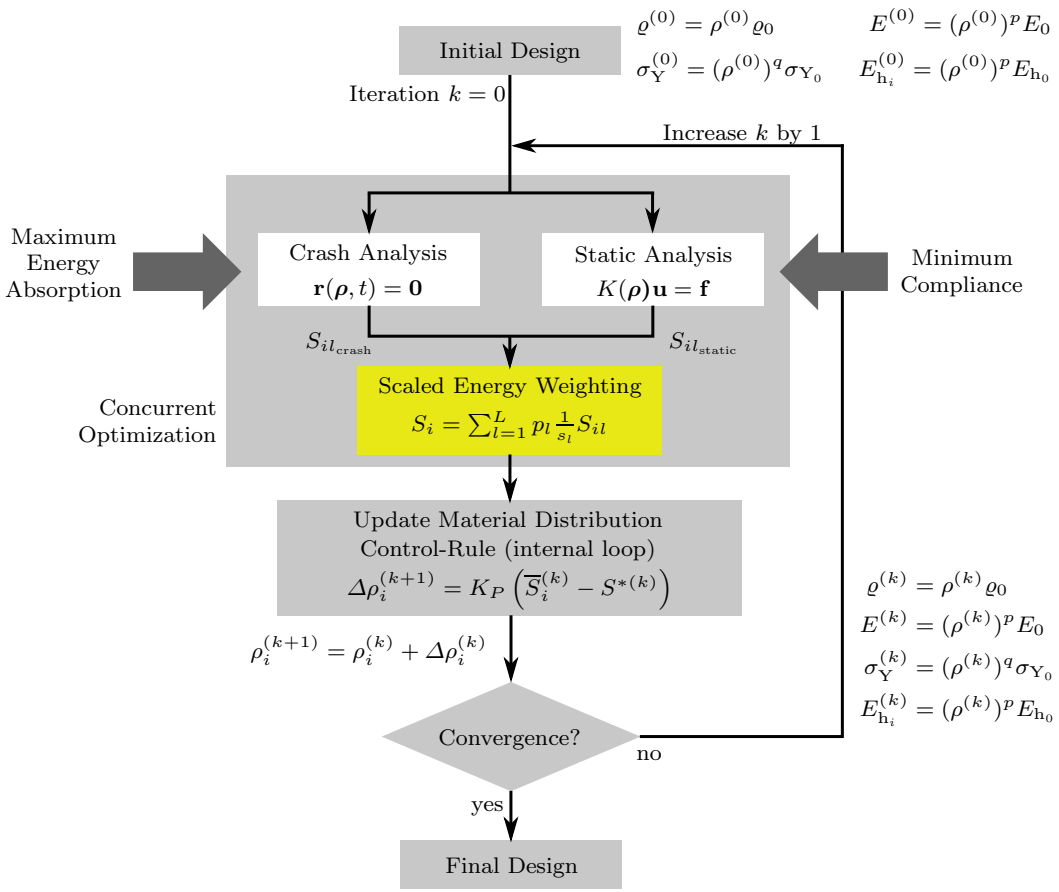

Fig. 2: The computational flow of the proposed SEW-HCA method that enables to perform a preference-based concurrent topology optimization for stiffness and energy absorption objectives

with the compliance c, the displacement vector $\mathbf{u}$ and the load vector $\mathbf{f}$. In the linear equilibrium equation, $\mathbf{K}$ is the stiffness matrix. A constraint V_f is imposed on the volume fraction of the structure. In order to avoid numerical difficulties resulting from a singular stiffness matrix, a minimum density $\rho_{\min}$ is defined. The minimum density is necessary to avoid close-to singular stiffness matrices that result in numerical problem for the analysis. When the value of the minimum density is small enough, its supporting effects can be neglected for linear, elastic loadings.

The maximization of the energy absorption can be formulated as:

$$\begin{aligned} &\max_{\boldsymbol{\rho}} \mathrm{E}_{\mathrm{abs}}(\boldsymbol{\rho}, t = t_{\mathrm{end}}) \\ &\text{subject to : } \mathbf{r}(\boldsymbol{\rho}, t) = \mathbf{0}, \\ &\qquad\qquad V(\boldsymbol{\rho})/V_0 = V_f^*, \\ &\qquad\qquad 0 < \rho_{\min} \leq \rho_i \leq 1,\ i = 1, \ldots, N\ , \end{aligned} \tag{11}$$

with the total energy $\mathrm{E}_{\mathrm{abs}}(\boldsymbol{\rho}, t = t_{\mathrm{end}})$ absorbed by the structure at the final time step of the simulation t_{end}, and the residual $\mathbf{r}(\boldsymbol{\rho}, t)$ of the finite element analysis. For non-linear loadings that cause large displacements, it is favourable to remove elements from the mesh when the minimum density is reached. This avoids numerical problems resulting from extreme deformation of the compliant, minimum density elements and reduces their undesired supporting effects. This potentially enables larger deformations and a better contact modelling, however self-contact modelling is still limited for regular, voxel design spaces that can result in zig-zag boundaries.

Both, crash and static problems can be addressed by the HCA approach, but are usually considered separately from each other: for some applications exclusively stiffness load cases are optimized (Tovar, 2004; Tovar et al, 2006, 2007) and for other ones exclusively crash loadings are optimized (Patel, 2007; Patel et al, 2009), although in principle a concurrent optimization is possible (Aulig et al, 2014).

Hence, we differentiate between stiffness and energy absorption objective functions. However, the energy ab-

sorption formulation (11) does not explicitly differentiate between stiff and energy absorbing domains, but the complete design space is considered as room for energy absorption. The ideal optimum would possibly devise a solution that shows different functional domains, but this is not anticipated by using the heuristic HCA method. However, a possible future extension of the method towards a user controlled energy flow path could be based on the compliant mechanism inspired HCA approach proposed by Bandi (Bandi, 2012). Furthermore, we explicitly focus on energy absorbing crash scenarios i.e. loads for which the objective in (11) is applicable. Other crash objective functions consider optimization of intrusion, forces or acceleration criteria that might be relevant, for instance, in a vehicle side pole impact. However, these type of objective functions and constraints are not the intended focus of the proposed method.

Typically, for both disciplines there can be numerous load cases. In density-based topology optimization, several load cases are usually accounted for by a linearly weighted aggregation of several instances of the objective function. It results a weighting of the sensitivities for the different load cases (Bendsøe and Sigmund, 2004). In the concurrent problem setting, however, very different objective functions have to be combined. For some cases of microstructural design, literature examples can be found, combining for instance stiffness and thermo elasticity (Deng et al, 2013), stiffness and fluid permeability (Guest and Prévost, 2006) or stiffness and thermal conductivity (Chen et al, 2009) by weighting approaches.

In the HCA method, when multiple crash load cases are considered, the field variables of the load cases are also combined by a linear weighting as (Patel, 2007):

$$S_i = \sum_{l=1}^{L} w_l S_{il} \quad , \tag{12}$$

with the number of load cases L, a weight w_l for each load case and the field variable S_{il} of element i for load case l. In related work, Bandi (Bandi et al, 2010; Bandi, 2012) adapts the weight dynamically, based on a HCA control rule similar to that used for material distribution. However, the experiments solely consider crash loads or static loads, separately, in contrast to the here-considered concurrent scenario. Also, we will demonstrate that a careful and systematic weight initialization is a sufficient approach to obtain balanced trade-off solutions.

As the weighting approach is a straight forward and applied typically for topology optimization as well as for multi-objective optimization (Coello et al, 2006; Marler and Arora, 2010), we propose its usage also for combining the concurrent stiffness and energy absorption objectives. As novel approach, we optimize a linear weighting of the objectives in (10) and (11) by applying the HCA methodology for the case of distinguished field variables:

$$S_{il} = \begin{cases} S_{il_{\text{crash}}} & \text{if } l \in \mathcal{L}_{\text{crash}} \\ S_{il_{\text{static}}} & \text{if } l \in \mathcal{L}_{\text{static}} \end{cases} , \tag{13}$$

with

$$S_{il_{\text{crash}}} = \max_t(\text{IED}_{il}(\boldsymbol{\rho}, t)) \quad , \tag{14}$$

$$S_{il_{\text{static}}} = \text{SED}_{il}(\boldsymbol{\rho}) \quad , \tag{15}$$

and the set of crash and static load case indices $\mathcal{L}_{\text{crash}}$, $\mathcal{L}_{\text{static}}$, respectively. Since both quantities are energies, the summation in (12) is physically meaningful.

An approximation of the Pareto front of the multi-objective problem can be obtained by several runs with different weights and user preferences can be expressed by increasing the appropriate weight(s). However, the weights in (12) have to account for the importance of load cases, as well as for the different scales of the objective functions (Marler and Arora, 2010), which are reflected in the different scales of the field variables. In particular, the energies occurring in a crash load case are usually orders of magnitudes higher than those occurring for a static load, resulting from plastic deformations with high internal energy densities. This is usually not considered sufficiently in weights chosen by users. Hence, we propose a formal separation of user preference and energy levels to achieve the (multi-objective) combination of concurrent static and crash load cases in HCA topology optimization.

In order to avoid a dominance of crash load cases, which implies a neglect of stiffness requirements, we propose to scale the field variables of the load cases:

$$S_i = \sum_{l=1}^{L} w_l S_{il} = \sum_{l=1}^{L} p_l \frac{1}{s_l} S_{il} \quad , \tag{16}$$

where s_l is a scaling factor and p_l a user preference. Our main contribution with this formulation is to decouple the scaling of the load cases from the preference of the engineer so that once a suitable s_l is determined, the choice of the weights can be based on the desired trade-off. We refer to our augmented method as Scaled Energy Weighting Hybrid Cellular Automaton (SEW-HCA).

For practical applications, we propose to choose the scaling factor as

$$s_l = \frac{W_l^{(k=0)}}{W_{\min}}, \text{ with } W_{\min} = \min_l W_l^{(k=0)} \quad , \tag{17}$$

where k is the iteration number and $W_l^{(k=0)}$ is the work of the structure obtained from the analysis of the initial HCA optimization iteration, in which $\rho_i = V_f$ for all elements. $W_{\min}$ is the minimum energy of the load cases. We suggest to determine the energy $W_l^{(k=0)}$ according to:

$$W_l^{(k=0)} = \begin{cases} \mathrm{E}_{\mathrm{abs}_l}(\boldsymbol{\rho}, t_{\mathrm{end}}) & l \in \mathcal{L}_{\mathrm{crash}}, \\ c_l(\boldsymbol{\rho}) & l \in \mathcal{L}_{\mathrm{static}}, \end{cases} \tag{18}$$

with

$$\mathrm{E}_{\mathrm{abs}_l}(\boldsymbol{\rho}, t_{\mathrm{end}}) = \sum_{i=1}^{N} \left(v_i \cdot \mathrm{IED}_{il}^{(k=0)}(\boldsymbol{\rho}, t_{\mathrm{end}})) \right) \quad , \tag{19}$$

$$c_l(\boldsymbol{\rho}) = \sum_{i=1}^{N} \left(v_i \cdot \mathrm{SED}_{il}^{(k=0)}(\boldsymbol{\rho}) \right) \quad , \tag{20}$$

i.e. the objective functions / energies of the initial design.

The values for $W_l^{(k=0)}$ are hence easily obtained in the initial iteration of the optimization without an additional finite element analysis. Therefore, SEW can be realized in existing HCA implementations with very little development and computational effort.

The measures given in (18) provide an indicator of the different magnitudes of energies involved in the load cases. Although energy levels might change slightly during the optimization this should usually be a better guess than any weights chosen based on user intuition. Concretely, the elemental IED or SED values of load case l are scaled by the ratio of the work of load case l to the minimum work from all load cases $1 \dots L$.

5 Case Studies

In order to validate the proposed SEW-HCA approach, we present two case studies. The first study confirms that the objective measures of structural performance are in fact optimized by the heuristic approach. Furthermore, we show that different choices of the preferences result in different trade-offs between the static and crash load cases. A multi-objective study on a beam test with various load cases validates these assumptions. The second study demonstrates the practical applicability of the method in the industrial vehicle design process. SEW-HCA is applied to a concurrent topology optimization of a vehicle body structure with eleven different load cases.

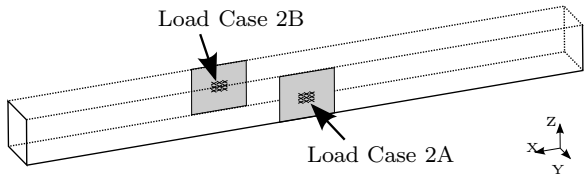

(a) Centre (Load Case 2A) and offset (Load Case 2B) static load cases. The loads are aligned with the y-axis, i.e. they are normal to the beam surface.

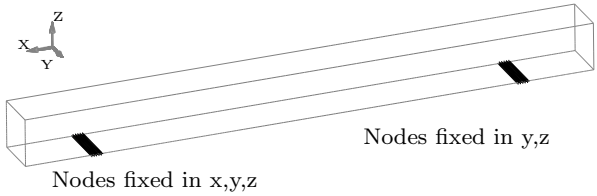

(b) The supports of the beam model for all load cases.

Fig. 3: The two static load cases and the supports of the beam model.

5.1 Validation on Beam Example

5.1.1 Beam Model and Load Cases

As validation test case we consider a 3-dimensional rectangular aluminum beam model, subject subject to two non-linear load cases where maximizing EA according to (11) is the objective, and two stiffness load cases where maximizing stiffness according to (10) is the objective. The whole $600\mathrm{mm} \times 50\mathrm{mm} \times 50\mathrm{mm}(\mathrm{L} \times \mathrm{W} \times \mathrm{H})$ beam volume is considered as a design space, meshed with 12,000 cubic elements with an edge length of 2.5mm.

The first static load case (Load Case 2A) is applied to the centre of the front side of the beam and the second one (Load Case 2B) is applied at an offset of 70mm to the back side of the beam, shown in Fig. 3(a). For each, a force of 10kN is distributed locally. The static loads are applied in orthogonal direction to the crash to avoid a direct conflict of the objectives. Figure 3(b) shows the supports for all load cases. Since this is only a test case, supports are simplified to improve numerical stability of the simulations.

The non-linear, dynamic load scenario is inspired by a simplified three-pole bend test with an intruding centre and an offset pole. The impactor is modelled by a rigid, cylindrical pole that is impacting the structure with a prescribed displacement from 0 to 100mm in transversal direction within 50ms. The non-linear load cases (Load Case 1A and 1B) are depicted in Fig. 4. The load cases model a bending mode, including the contact and material deformation past yield, yet folding effects are not considered.

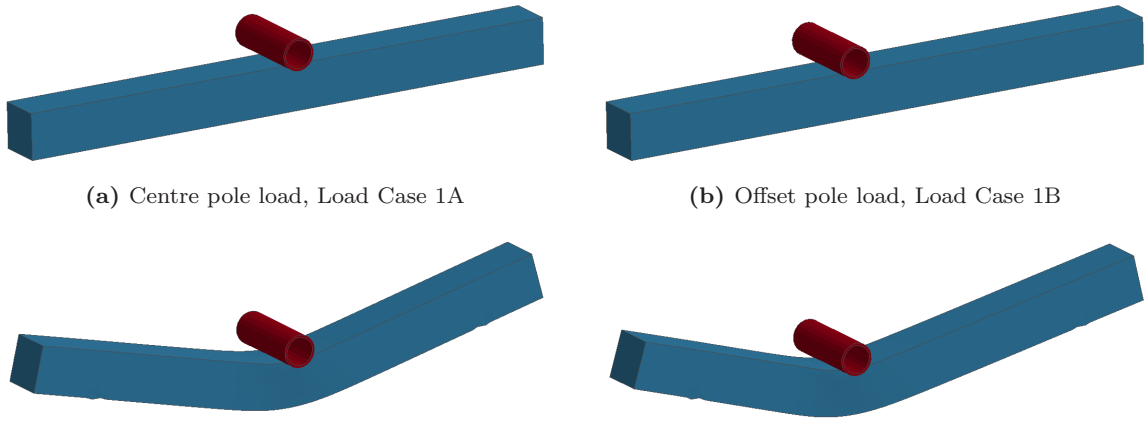

(a) Centre pole load, Load Case 1A

(b) Offset pole load, Load Case 1B

(c) Centre pole load, deformed

(d) Offset pole load, deformed

Fig. 4: The non-linear beam load cases

The aluminium material is modelled as piecewise-linear elastic plastic. Care was taken to ensure that the static load cases remain in the elastic portion, while the non-linear load cases go beyond yield. The implicit and explicit solvers of the commercial tool LS-Dyna are used for the analysis of static and non-linear load cases, respectively.

The presented beam model and the load cases are designed to embody characteristics of actual industrial problems. However, their main purpose is to provide a test scenario for the proposed SEW-HCA method. Therefore, much more than on modelling a real physical system, the main focus is a stable suite of models which include linear behaviour in order to maximize stiffness and non-linear models with contact and plastic deformation. This suite of models represents an optimization scenario with manageable computational expense that enables to evaluate the concurrent approach, but which can be easily exchanged for a more complex, real world problem such as the vehicle body considered in Sec. 5.2.

5.1.2 Optimization Set-up

In order to validate the assumption that HCA provides structures that show good performance with respect to the chosen objective performance functions (10) and (11), different combinations of load cases are optimized. In the first experiment, both static load cases, in the second experiment both non-linear load cases and in the third (concurrent) experiment, the centre pole loading and the centre static loading are combined.

Secondly, we demonstrate the ability of SEW-HCA to provide different trade-offs according to the user preference. For this purpose, we perform a multi-objective study for different load case preferences. For each of the experiments, the preference parameter is varied, i.e. the preference is $p_1 = 0.00, 0.05, \ldots 0.95, 1.00$ for the first load case and $p_2 = 1 - p_1$ for the second load case. A move limit $m = 0.05$ is used and the optimization is run until the change in densities is below $\varepsilon = 0.001$. The optimization targets a volume fraction of $V_f = 0.4$. The filter/neighbourhood radius is set to $r_{\min} = 8.8$mm.

The generality of the SEW-HCA as improvement for the weighting of load cases in topology optimization is emphasized, since we apply it also for the optimization with only non-linear and the optimization with only static, linear load cases. The implementation is based on a solver specific topology optimization interface (Aulig and Lepenies, 2012).

5.1.3 Optimization Results

For all three experiments, we measure the performance by compliance and energy absorption, depending on what is applicable for the load case. The results of the SEW-HCA topology optimizations are shown in Fig. 5. For each value of the preference, the optimized structure of the final iteration shows as one point in objective space. Non-dominated solutions in terms of the two objectives are indicated by a circle.

The SEW-HCA algorithm does not solve for minimizing or maximizing these objectives explicitly, but achieve improvement in these measures by solving for a uniform internal energy distribution. Note that compliance is minimized and energy absorption is maximized, resulting in visually different Pareto fronts. Figure 5(a) shows the performance when the two static load cases are considered. As we can see, solutions are found that have low compliance for Load Case 2A and high compliance for Load Case 2B and vice versa. At first, this

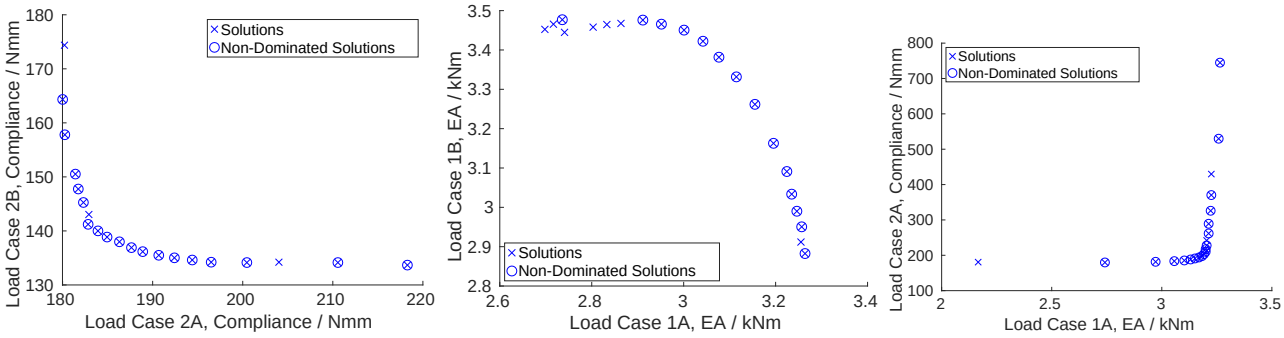

(a) Two static loads **(b)** Two crash loads **(c)** One crash and one static load

Fig. 5: SEW-HCA optimized solutions in objective space on the beam test case for different combinations of load cases. For all the tested combinations the preference enables to obtain different trade-offs between the objectives

validates that the uniform energy assumption can be applied to optimize for minimum compliance structures and, secondly, that by adapting p_1, SEW-HCA can provide trade-off solutions depending on the user preference. A similar result is observed for the non-linear load cases in Fig. 5(b). For these loads, the SEW-HCA results in solutions that maximize energy absorption and the preference enables to tune the desired trade-off between the two load cases.

Finally, for combining non-linear Load Case 1A and static Load Case 2A concurrently, the same behaviour is observed. When preferences are chosen accordingly, we obtain a maximization of energy absorption for the non-linear load and a minimization of compliance for the static load. A variety of different solutions approximates the Pareto front and provides trade-offs that balance both objectives.

It can be observed that in all cases there also exist dominated solutions. These are most likely caused by the heuristic nature of the optimization procedure, from which global optima cannot be expected.

From Fig. 5, it can be seen that the objective values of the optimized structures change continuously depending on the preference. The same is true for the structure itself. By altering the preference, structural features change slowly. This is shown in Fig. 6. The structure optimized for non-linear Load Case 1A smoothly transforms its structural features while the preference for the static load case is increased. Finally a structure that is optimized for the stiffness load case is obtained. At the centre, the inside of the beam is mostly massive for the crash load with a tendency of becoming more hollow towards the static load cases solution. Moving away from the centre the beam is more hollow for all load cases, resembling an slowly opening square-cut profile for about 80mm.

We conclude that in all three multi-objective studies it is possible to obtain trade-offs that consider the requirements of both load cases. This holds even if those load cases are multi-disciplinary and involve a non-linear, crash-like loading, and a linear, static load.

5.2 Application to Vehicle Body Design

The previous section demonstrates that SEW-HCA is a feasible approach to perform topology optimization for the defined objectives. The method as well provides trade-off solutions based on the defined preference. The next step is the application to a realistic industrial problem. This section presents a case study that considers the application of SEW-HCA to a vehicle body model.

5.2.1 Vehicle Body Model and Load Cases

We consider the design space defined by a body-in-white vehicle geometry (Aulig et al, 2016). The design space is shown in Fig. 7. It is meshed with over 1.4 million cubic elements with an edge length of 10mm. The model provides the solid volume where structural components of the vehicle body-in-white may be located, taking initial design decisions into account. Hollow sections are not considered with this design space. The target of the topology optimization with SEW-HCA is to identify the most important load paths as a conceptual design for designers and engineers. Post-processing of these solid representations of the load paths will be necessary to develop the design; however, this activity is beyond the scope of this paper.

For an efficient vehicle design process, several stiffness and crash requirements are considered in this concept phase. In this study, we consider nine static load

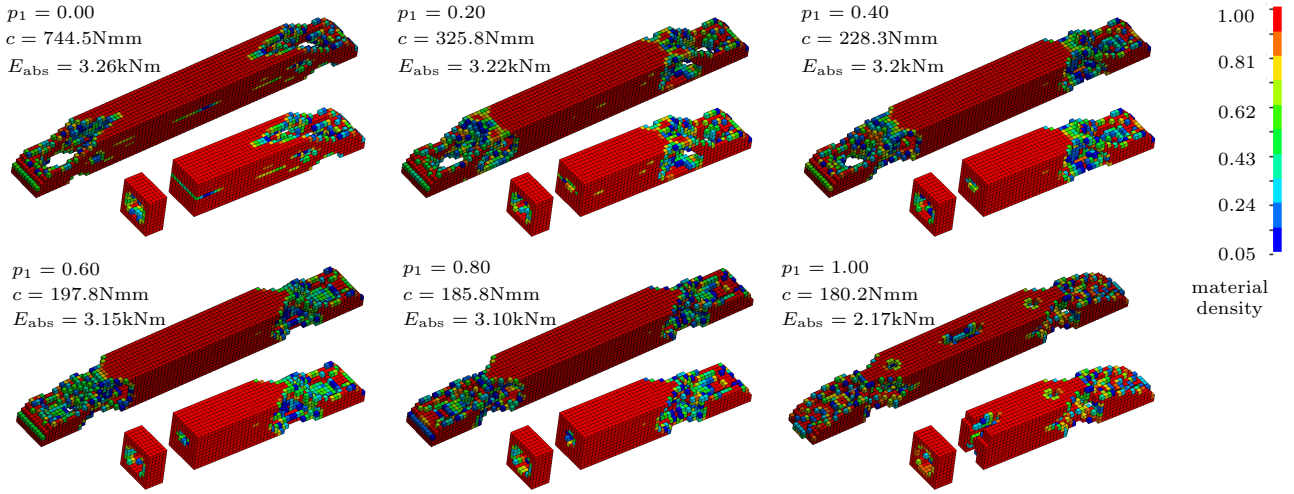

Fig. 6: Structures resulting on the beam case study, with a non-linear and a linear, static load case. The preference for the static load is varied from $p_1 = 0.00$ in the upper left in steps of 0.2 to a preference of $p_1 = 1.00$ in the bottom right. In the same time, the preference for the non-linear load case is reduced. It can be observed that there is a continuous transition in between the two single load case designs. The interior of the structure is shown by cuts through the centre and 45mm and 70mm from it.

cases that represent loads at normal operating conditions of the vehicle and two load cases that represent non-linear loads in a crash scenario.

The two crash load cases are a front and a rear small overlap crash with a rigid wall. For the front crash, an initial velocity of 10m/s is applied to the design space, for the rear crash, an initial velocity of 20m/s is applied, each simulated for 30ms. The crash loads are illustrated in Fig. 8. As these load cases are generic and intended to load the design space in a representative manner, the load cases are designed such that deformation of the solid design space is non-linear but not extreme. Also, due to the requirement to efficiently run a number of simulations during the optimization a balance between model precision and computational cost has to be found. Excessive deformation is unnecessary to represent this loading condition and will lead to unrealistic and potentially unstable results of the solid finite element models. Therefore, we consider only qualitative crash deformation with bending modes, and no buckling and folding (forming of plastic hinges) crash modes. The simplified crash modelling is sufficient for the intention of focusing on an early concept phase. More detailed crash modelling is required in later design stages to confirm the design derived from the concept.

The static load cases are shown in Fig. 9 and can be differentiated into front, seat and rear load cases. In the front, a bending, a twist, a sub-frame twist and a lateral load are applied. In the back as well a bending,

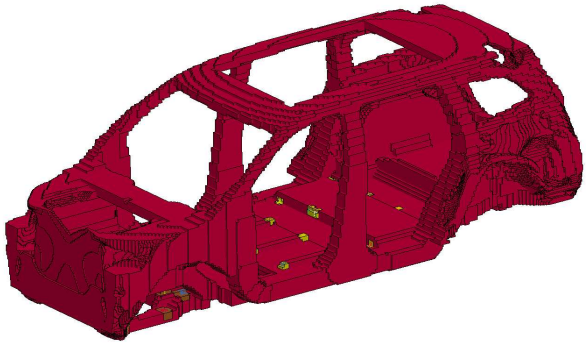

Fig. 7: The vehicle body-in-white design space

a twist and a lateral load are applied. The lateral loads are calculated at the body points that are caused by the wheel suspension in a lateral load scenario. Seat loads in the front and in the rear represent the weight of passengers in the cabin. The boundary conditions of the static load cases are provided by the inertia relief method.

A steel material is assumed for the design space and plasticity is modelled by a piecewise linear, elastic-plastic material model. The finite element models of the crash load cases are analysed with the explicit solver and the static load cases are analysed with the implicit solver of the commercial software LS-DYNA.

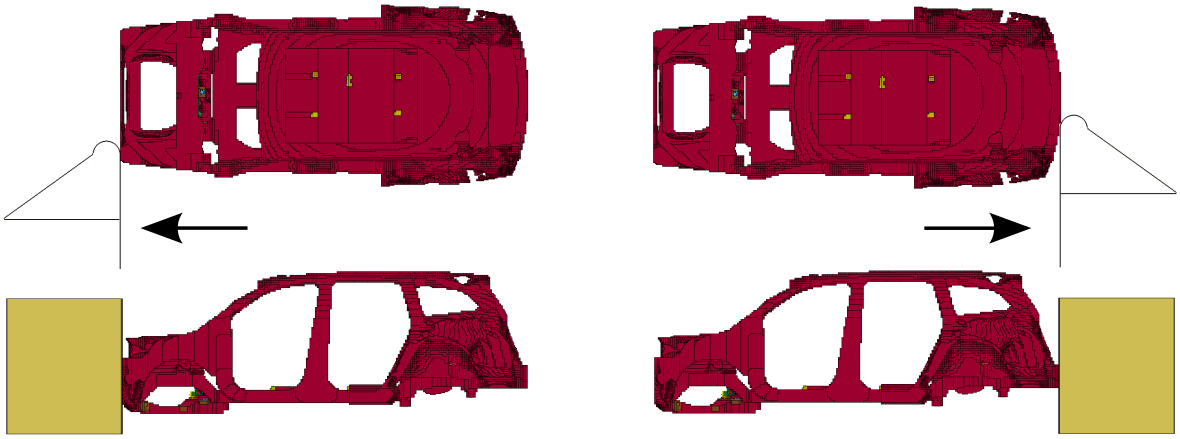

(a) The frontal crash load **(b)** The rear crash load

Fig. 8: The body-in-white crash load cases

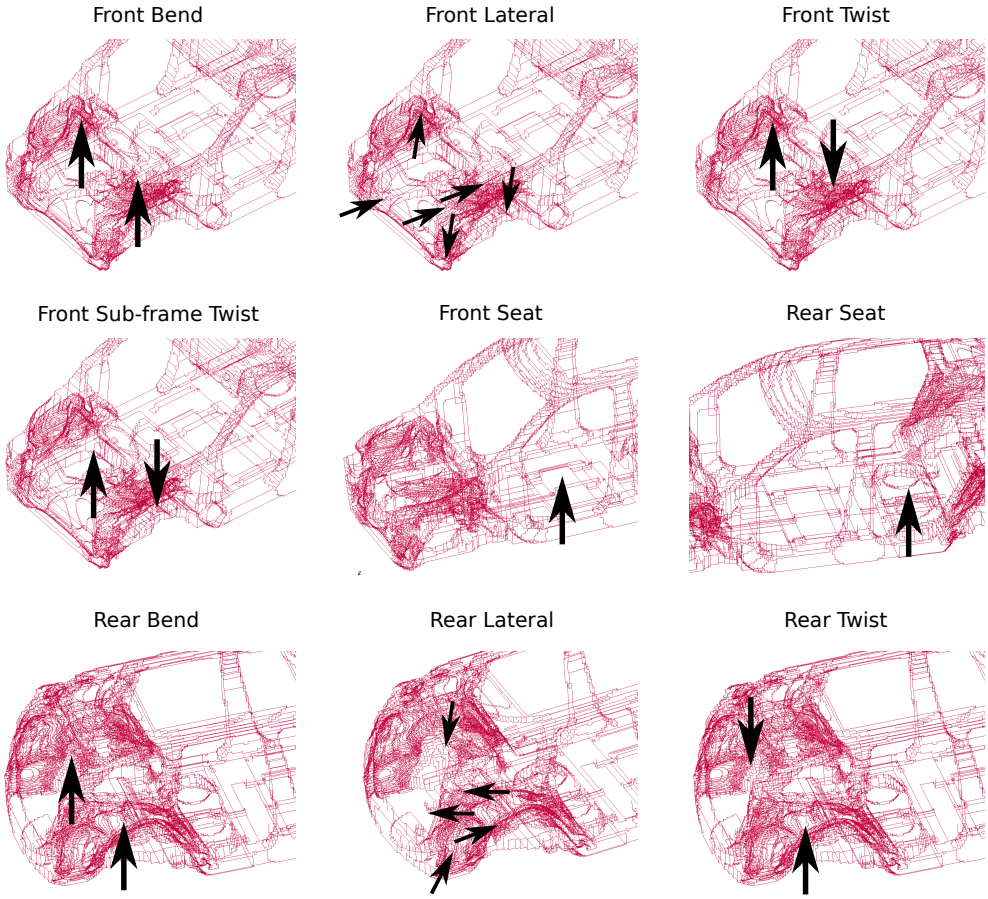

Fig. 9: The nine body-in-white static load cases

5.2.2 Optimization Set-up

By application of SEW-HCA to this realistic design space and loading scenario from the vehicle design process, we can asses the potential of the proposed approach. For this case study, we apply LS-TaSC that provides a commercial implementation of the HCA algorithm (Roux, 2011). Compared to our own implementation used in Sec. 5.1, LS-TaSC is capable of handling the optimization of large design spaces efficiently.

Additionally, its use demonstrates that SEW-HCA can be applied readily within an industrial tool chain. The weights are determined by the SEW approach according to (16) and used as input to the software. A volume target fraction $V_f = 0.3$ is defined. Note that this results in a solid structure with a higher weight of what is typical for body-in-white vehicle structures. However, the resulting concept is a starting point for the subsequent design process, hence the actual weight is of minor interest for the load path identification. Parameters are set as follows: $r_{\min} = 35.3\text{mm}$, $m = 0.1$, $\varepsilon = 0.002$, $\rho_{\min} = 0.005$.

Due to the computational expense of the finite element simulations we only consider one topology optimization run that targets the optimization of all eleven load cases concurrently. Since we target a structure that balances energy absorption and stiffness, we distribute the preference equally, i.e. $p_{\text{crash}} = p_{1,2} = 0.5/2 = 0.25$ and $p_{\text{static}} = p_{3,4,5,6,7,8,9,10,11} = 0.5/9 = 0.056$. Figure 10(a) shows this preference distribution for the load cases. Fig. 10(b) shows the resulting weights. The scaled weighting uses the energy of the initial iteration defined in (17). Note the logarithmic scale of the weights and their antagonism to the user preferences. These weight values are very unintuitive and cannot be expected to be chosen by users of an optimization tool. This is an important motivation for the proposed systematic approach.

For comparison of the "*Concurrent*" optimization of all eleven multi-disciplinary load cases, additional runs of SEW-HCA are performed. In the "*Stiffness Only*" run, only the nine static load cases and in the "*Crash Only*" only the two crash load cases are considered. Preferences are split equally between the load cases. As baselines for static loadings, the single load case HCA optimization is performed. In order to obtain a realistic design, a symmetry constraint is defined for all optimization runs.

In the presented set-up, SEW-HCA does not distinguish between occupant and crash zones, but uses the entire design space for all load cases. This set-up provides the full search space for all load cases and avoids a bias that restricts energy absorption to predefined areas. In future work, however, it might be possible in principle to include vehicle designers preferences to preselect portions of the design spaces for different objectives.

5.2.3 Optimization Results

Figure 11 shows the resulting concept structure from the 'Concurrent' optimization with SEW-HCA. The majority of elements in the design space converged to either zero (not shown) or one. A small amount of elements with an intermediate density remains. The design can be easily post-processed by rounding densities to zero and one by applying a threshold. The design was carefully examined for hollow parts by cutting along planes and though the most massive members. Most structural members are filled with material. Exceptions are the side sill which is shaped like a U-profile with the opening towards the occupant space. Additionally, in the front subframe below the A-pillar a hollow volume is present. The structure clearly provides material connections that can help vehicle designers to identify important load paths.

For evaluation of the objective performance, for each load case the absorbed energy and the compliance is measured as described by (11) and (10). The result is compared to the 'Stiffness Only' and 'Crash Only' SEW-HCA runs. The performance is quantified as energy absorption E_{abs} for the crash load cases and as stiffness $\frac{1}{c}$ for the static load cases. Instead of compliance, stiffness is evaluated so that for both disciplines higher values indicate better performance. Since the results of the optimization is a solid structure with high mass, the performance of the resulting structure is evaluated relative to a comparable baseline structure. The absolute values are not comparable to manufacturable body-in-white structures, since at this stage in development the designs are only representative. The intention is to solve for load paths and provide the result as a starting point for designers early in the development process. Therefore, the preferred way to judge the effectiveness of the method is by comparing the optimization results by several runs with inclusion or exclusion of load cases within the optimization.

For the static load cases the result of a single load case HCA optimization provides the highest stiffness. It serves as 100% baseline for the static load cases. For the crash load cases the actual maximum in energy absorption that can be reached is used as 100% baseline. It is given by the kinetic energy of the design space at the beginning of the simulation. Table 1 shows all values, absolute and normalized with respect to the baselines. For the purpose of completeness, the absolute values are provided as well. The 'Crash Only' result is also evaluated for the stiffness load cases and vice versa, the 'Stiffness Only' result is also evaluated for the crash load cases to facilitate a better comparison.

Optimization of nine static load cases causes a performance drop compared to the single load case runs, as can be expected since the available material has to be distributed to account for all nine static load cases. Yet, with 0.35% the performance of the 'Stiffness Only' optimization is about four times as high as that of the

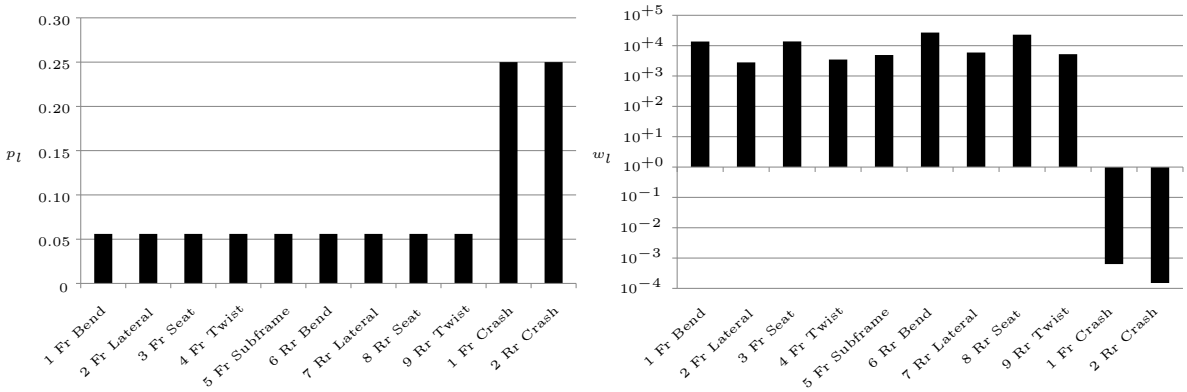

(a) Preferences p_l **(b)** Weights w_l

Fig. 10: Weights and preferences for the load cases of the body-in-white model

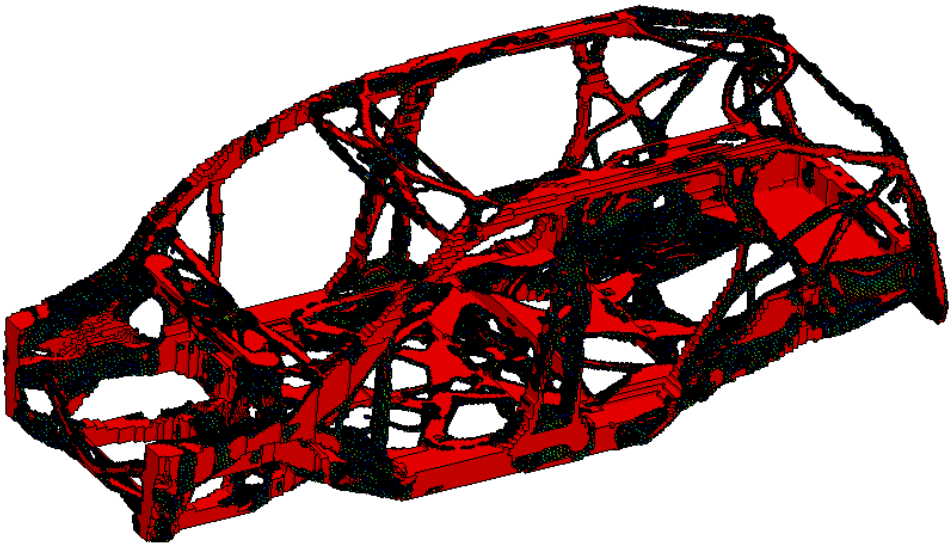

Fig. 11: The structural result from SEW-HCA for the vehicle body-in-white structure

'Crash Only' optimization, where the static load cases are not considered at all. However, the 'Concurrent' run drops only about 10% in performance compared to Stiffness Only, although crash loads are included. This demonstrates that including the crash load cases additionally to the static load cases, does only slightly reduce the ability of the optimization to find a high stiffness solution for the static load cases in this experiment.

When considering the energy absorption on average, the 'Stiffness Only' solution achieves about 63% of the baseline. The 'Crash Only' and the 'Concurrent' solution achieve an absorption of almost 90%. At least for this example and the chosen measure, it is possible to include nine stiffness load cases without loosing energy absorption performance. Interestingly, the 'Concurrent' result is even marginally better than the 'Crash Only' solution. This is unexpected, however it might be caused by the heuristic nature of the approach. Either the algorithm reaches a more uniform distribution of the energies in the 'Concurrent' run, or the hypothesis that a uniform energy distribution leads to a maximizing energy absorption has to be rejected in the general case. A possible explanation is that including the static load biases the search towards a different local optimum for the 'Concurrent' run, which appears to be more efficient in energy absorption. Practically, it is interesting to see that considering the stiffness load cases

Load Case	Stiffness Only (Nine Loads) $1/c$ [1/Nmm]	norm. $1/c$	Crash Only (Two Loads) $1/c$ [1/Nmm]	norm. $1/c$	Concurrent (Eleven Loads) $1/c$ [1/Nmm]	norm. $1/c$
Front Bend	0.99	0.36	0.15	0.05	0.81	0.30
Front Lateral	0.17	0.33	0.07	0.15	0.13	0.26
Front Seat	0.93	0.26	0.31	0.09	0.56	0.16
Front Twist	0.24	0.31	0.06	0.08	0.15	0.19
Front Sub-frame Twist	0.37	0.35	0.16	0.15	0.25	0.24
Rear Bend	1.03	0.28	0.12	0.03	0.75	0.20
Rear Lateral	0.29	0.80	0.05	0.15	0.25	0.68
Rear Seat	1.49	0.34	0.25	0.06	0.77	0.18
Rear Twist	0.20	0.17	0.02	0.02	0.13	0.11
Average	0.63	0.35	0.13	0.09	0.42	0.26
	E_{abs}[kNm]	norm. E_{abs}	E_{abs}[kNm]	norm. E_{abs}	E_{abs}[kNm]	norm. E_{abs}
Front Crash	114.58	0.68	142.69	0.84	146.31	0.86
Rear Crash	401.31	0.59	625.29	0.92	627.49	0.92
Average	257.95	0.63	383.99	0.88	386.90	0.89

Table 1: The table presents results of three separate optimizations runs with 'Stiffness Only', 'Crash Only' and 'Concurrent' load cases. Stiffness and energy absorption of the optimized vehicle body designs are given as absolute values and as normalized values. As normalization baseline for the stiffness load cases serves the result of a single load case optimization and for the crash load cases the total kinetic energy, respectively.

might even be beneficial, within the proposed approach as can be see in Tab. 1. However, in this case, we consider the 1% difference in the energy absorption of the 'Concurrent' and 'Crash Only' solutions of little significance. More important is the observation that, in this scenario, static load cases can be considered without severely effecting the energy absorbing capabilities of the design compared to a crash only optimization.

6 Conclusion

We presented the Scaled Energy Weighting Hybrid Cellular Automaton (SEW-HCA) algorithm as a practical method for obtaining concept structures in the industrial vehicle design process. SEW-HCA facilitates to consider the multi-disciplinary requirements from stiffness and crashworthiness as load cases in a concurrent topology optimization. This is achieved by a conceptual separation of preferences and scaling of load cases. The feasibility of the approach is demonstrated for a multi-objective study on beam examples, where the performance is quantified by objective measures of compliance and energy absorption. The systematic choice of weights, based on a reference energy helps the user to express preferences so that the desired trade-off can be chosen. Furthermore, the method has been applied successfully to the industrial case of a vehicle body-in-white design space, where an optimized concept design for eleven load cases is obtained. The results suggest that the SEW-HCA can contribute to innovative and more efficient automotive structures in the future.

Acknowledgements The authors would like to thank Bernhard Sendhoff and Michael Gienger from the Honda Research Institute for their valuable comments and support.

References

Allaire G, Jouve F (2006) Coupling the level set method and the topological gradient in structural optimization. In: IUTAM symposium on topological design optimization of structures, machines and materials, Springer, pp 3–12

Allaire G, Jouve F, Toader AM (2004) Structural optimization using sensitivity analysis and a level-set method. Journal of computational physics 194(1):363–393

Aulig N, Lepenies I (2012) A topology optimization interface for LS-DYNA. In: 11. LS-DYNA Forum, Ulm

Aulig N, Olhofer M (2016) State-based representation for structural topology optimization and application to crashworthiness. In: Evolutionary Computation (CEC), 2016 IEEE Congress on, Vancouver, BC, Canada, pp 1642–1649, DOI 10.1109/CEC.2015.7257042

Aulig N, Menzel S, Nutwell E, Detwiler D (2014) Towards multi-objective topology optimization of structures subject to crash and static load cases. In: Engineering Optimization 2014, CRC Press, pp 847–852, DOI 10.1201/b17488-151

Aulig N, Menzel S, Nutwell E, Detwiler D (2016) Preference-based topology optimization of body-in-white structures for crash and static loads. In: 14th LS-DYNA International Conference, Dearborn, MI, USA

Bandi P (2012) Design of crashworthy structures with controlled behavior in hca framework. PhD thesis, University of Notre Dame

Bandi P, Mozumder CK, Tovar A, Renaud JE (2010) Crashworthiness design for multiple loading conditions using dynamic weighting factors in hca framework. In: 13th AIAA/ISSMO Multidisciplinary Analysis Optimization Conference, p 9133

Bendsøe M (1989) Optimal shape design as a material distribution problem. Structural optimization 1:193–202, DOI 10.1007/BF01650949

Bendsøe M, Kikuchi N (1988) Generating optimal topologies in optimal design using a homogenization method. Computer Methods in Applied Mechanics and Engineering 71:197–224

Bendsøe M, Sigmund O (2004) Topology Optimization Theory, Methods and Applications, 2nd edn. Springer Verlag Berlin

Bendsøe MP, Sigmund O (1999) Material interpolation schemes in topology optimization. Archive of applied mechanics 69(9-10):635–654

Bujny M, Aulig N, Olhofer M, Duddeck F (2016a) Evolutionary crashworthiness topology optimization of thin-walled structures. In: 11th ASMO UK / ISSMO / NOED2016: International Conference on Numerical Optimisation Methods for Engineering Design, Munich, Germany

Bujny M, Aulig N, Olhofer M, Duddeck F (2016b) Evolutionary level set method for crashworthiness topology optimization. In: ECCOMAS Congress, Crete Island, Greece

Burger M, Hackl B, Ring W (2004) Incorporating topological derivatives into level set methods. Journal of Computational Physics 194(1):344–362

Cavazzuti M, Baldini A, Bertocchi E, Costi D, Torricelli E, Moruzzi P (2011) High performance automotive chassis design: a topology optimization based approach. Structural and Multidisciplinary Optimization 44(1):45–56

Chen Y, Zhou S, Li Q (2009) Computational design for multifunctional microstructural composites. International Journal of Modern Physics B 23(06n07):1345–1351

Chuang C, Yang R, Li G, Mallela K, Pothuraju P (2008) Multidisciplinary design optimization on vehicle tailor rolled blank design. Structural and Multidisciplinary Optimization 35(6):551–560

Chuang CH, Yang RJ (2012) Benchmark of topology optimization methods for crashworthiness design. In: 12 th International LS-DYNA Users Conference

Coello CAC, Lamont GB, Veldhuizen DAV (2006) Evolutionary Algorithms for Solving Multi-Objective Problems (Genetic and Evolutionary Computation). Springer-Verlag New York, Inc., Secaucus, NJ, USA

Deaton J, Grandhi R (2014) A survey of structural and multidisciplinary continuum topology optimization: post 2000. Structural and Multidisciplinary Optimization 49(1):1–38, DOI 10.1007/s00158-013-0956-z

Deng J, Yan J, Cheng G (2013) Multi-objective concurrent topology optimization of thermoelastic structures composed of homogeneous porous material. Structural and Multidisciplinary Optimization 47(4):583–597, DOI 10.1007/s00158-012-0849-6

van Dijk N, Maute K, Langelaar M, van Keulen F (2013) Level-set methods for structural topology optimization: a review. Structural and Multidisciplinary Optimization 48(3):437–472, DOI 10.1007/s00158-013-0912-y

Duddeck F (2008) Multidisciplinary optimization of car bodies. Structural and Multidisciplinary Optimization 35(4):375–389, DOI 10.1007/s00158-007-0130-6

Duddeck F, Hunkeler S, Lozano P, Wehrle E, Zeng D (2016) Topology optimization for crashworthiness of thin-walled structures under axial impact using hybrid cellular automata. Structural and Multidisciplinary Optimization pp 1–14, DOI 10.1007/s00158-016-1445-y

Guest JK, Prévost JH (2006) Optimizing multifunctional materials: Design of microstructures for maximized stiffness and fluid permeability. International Journal of Solids and Structures 43(22-23):7028 – 7047, DOI 10.1016/j.ijsolstr.2006.03.001

Hunkeler S (2013) Topology optimisation in crashworthiness design via hybrid cellular automata for thin-walled structures. PhD thesis, Queen Mary University of London, UK

Kang B, Choi W, Park G (2001) Structural optimization under equivalent static loads transformed from dynamic loads based on displacement. Computers & Structures 79(2):145–154

Kiani M, Gandikota I, Parrish A, Motoyama K, Rais-Rohani M (2013) Surrogate-based optimisation of automotive structures under multiple crash and vibration design criteria. International Journal of Crashworthiness 18(5):473–482, DOI 10.1080/13588265.2013.805294

Kiani M, Shiozaki H, Motoyama K (2015) Simulation-based design optimisation to develop a lightweight body-in-white structure focusing on dynamic and static stiffness. International Journal of Vehicle Design 67(3):219–236, DOI 10.1504/IJVD.2015.069467

Leotardi C, Serani A, Iemma U, Campana EF, Diez M (2016) A variable-accuracy metamodel-based architecture for global mdo under uncertainty. Structural and Multidisciplinary Optimization 54(3):573–

593, DOI 10.1007/s00158-016-1423-4

Marler R, Arora J (2010) The weighted sum method for multi-objective optimization: new insights. Structural and Multidisciplinary Optimization 41(6):853–862, DOI 10.1007/s00158-009-0460-7

Mlejnek H (1992) Some aspects of the genesis of structures. Structural Optimization 5(1-2):64–69

Olschinka C, Schumacher A (2008) Graph based topology optimization of crashworthiness structures. PAMM 8(1):10,029–10,032, DOI 10.1002/pamm.200810029

Ortmann C (2015) Entwicklung eines graphen- und heuristikbasierten verfahrens zur topologieoptimierung von profilquerschnitten für crashlastfälle. PhD thesis, Bergische Universität Wuppertal

Ortmann C, Schumacher A (2013) Graph and heuristic based topology optimization of crash loaded structures. Structural and Multidisciplinary Optimization 47(6):839–854, DOI 10.1007/s00158-012-0872-7

Park GJ (2011) Technical overview of the equivalent static loads method for non-linear static response structural optimization. Structural and Multidisciplinary Optimization 43:319–337, 10.1007/s00158-010-0530-x

Patel NM (2007) Crashworthiness design using topology optimization. PhD thesis, University of Notre Dame

Patel NM, Kang BS, Renaud JE, Tovar A (2009) Crashworthiness design using topology optimization. Journal of Mechanical Design 131(6):061,013

Patnaik SN, Hopkins DA (1998) Optimality of a fully stressed design. Computer Methods in Applied Mechanics and Engineering 165(1-4):215–221, DOI http://dx.doi.org/10.1016/S0045-7825(98)00041-3

Pedersen C (2003a) Topology optimization design of crushed 2d-frames for desired energy absorption history. Structural and Multidisciplinary Optimization 25(5-6):368–382, DOI 10.1007/s00158-003-0282-y

Pedersen CBW (2003b) Topology optimization for crashworthiness of frame structures. International Journal of Crashworthiness 8(1):29–39, DOI 10.1533/ijcr.2003.0218

Pedersen CBW (2003c) Topology optimization of 2d-frame structures with path-dependent response. International Journal for Numerical Methods in Engineering 57(10):1471–1501, DOI 10.1002/nme.787

Pedersen CBW (2004) Crashworthiness design of transient frame structures using topology optimization. Computer Methods in Applied Mechanics and Engineering 193(6-8):653 – 678, DOI DOI:10.1016/j.cma.2003.11.001

Roux W (2011) Topology design using LS-TaSC^{TM} version 2 and LS-DYNA. In: 8th European LS-DYNA Users Conference

Ryberg AB, Bäckryd RD, Nilsson L (2015) A metamodel-based multidisciplinary design optimization process for automotive structures. Engineering with Computers 31(4):711–728, DOI 10.1007/s00366-014-0381-y

Sala R, Baldanzini N, Pierini M (2016) Representative surrogate problems as test functions for expensive simulators in multidisciplinary design optimization of vehicle structures. Structural and Multidisciplinary Optimization 54(3):449–468, DOI 10.1007/s00158-016-1410-9

Sigmund O (1994) Design of material structures using topology optimization. PhD thesis, Department of Solid Mechanics, Technical University of Denmark

Sigmund O, Maute K (2013) Topology optimization approaches. Structural and Multidisciplinary Optimization 48(6):1031–1055, DOI 10.1007/s00158-013-0978-6

Svanberg K (1987) The method of moving asymptotes-a new method for structural optimization. International journal for numerical methods in engineering 24(2):359–373

Svanberg K (2002) A class of globally convergent optimization methods based on conservative convex separable approximations. SIAM journal on optimization 12(2):555—573

Tovar A (2004) Bone remodeling as a hybrid cellular automaton optimization process. PhD thesis, University of Notre Dame

Tovar A, Patel NM, Niebur GL, Sen M, Renaud JE (2006) Topology optimization using a hybrid cellular automaton method with local control rules. Journal of Mechanical Design 128(6):1205–1216

Tovar A, Patel NM, Kaushik AK, Renaud JE (2007) Optimality conditions of the hybrid cellular automata for structural optimization. AIAA journal 45(3):673–683

Volz K (2011) Physikalisch begründete ersatzmodelle für die crashoptimierung von karosseriestrukturen in frühen projektphasen. PhD thesis, Technische Universität München

Wang MY, Wang X, Guo D (2003) A level set method for structural topology optimization. Computer methods in applied mechanics and engineering 192(1):227–246

Yang R (1997) Multidiscipline topology optimization. Computers & Structures 63(6):1205–1212

Zhou M, Rozvany G (1991) The COC algorithm, part II: topological, geometrical and generalized shape optimization. Computer Methods in Applied Mechanics and Engineering 89(1):309–336