Honda Research Institute EU
Honda Research Institute Europe GmbH
https://www.honda-ri.de/

Topology Optimization of a Bumper Beam System Considering a Nonlinear Design Requirement

Emily Nutwell, Nikola Aulig, Duane Detwiler

2017

Preprint:

This is an accepted article published in NAFEMS World Congress 2017. The final authenticated version is available online at: https://doi.org/[DOI not available]

© NAFEMS 2017 REPRODUCTION AND REDISTRIBUTION PROHIBITED www.nafems.org

Topology Optimization of a Bumper Beam System Considering a Nonlinear Design Requirement

Emily Nutwell
(Research Specialist: Ohio State University SIMCenter, USA)

Nikola Aulig
(Scientist: Honda Research Institute Europe GmbH, Germany)

Duane Detwiler
(Chief Engineer: Honda R&D Americas, USA)

Abstract

Methods of topology optimization are used to generate an optimal layout of material within a defined design space subject to single or multiple load cases. These methods are increasingly utilized in the field of concept design for automotive development. A vehicle's bumper system is often subjected to loading conditions which require the structure to be efficient at absorbing energy. While an optimal bumper system maximizes energy absorbed during crush of the structure there are typically constraints placed on the system's performance related to peak stroke and loads that are generated due to vehicle impacts at various speeds.

The Hybrid Cellular Automata algorithm is well suited to consider load cases where efficient energy absorption is the desired criteria. For this work, this approach is applied to a front bumper system of a vehicle that is subjected to various load cases where a maximization of energy absorption is the end goal. This necessitates a suitable definition of the design space so that the structure will achieve this objective. For this design space, extrusion constraints are necessary in order to derive a feasible concept design. By comparing the performance of the generated topology results to a typical bumper design, it can be shown that improvements in energy absorption when normalized by the mass of the design can be achieved through this method.

1. Introduction

Topology optimization of vehicle bodies for crash worthiness has historically been a difficult challenge. The nonlinear nature of these events has required over simplification of the problem in order to generate a topology result. For the goal of passenger safety, the vehicle needs to be efficient at absorbing the high energy input into the system. Recently, this has been tackled successfully using several methods; notably the application of the Hybrid Cellular Automata (HCA) algorithm to generate structures that are efficient at absorbing energy [1].

In this paper, we discuss the topology optimization of a vehicle bumper system in terms of its requirement to be an efficient energy absorbing structure. In Section 2, a brief overview of the Hybrid Cellular Automata algorithm is discussed, Section 3 describes the problem statement for the bumper system, Section 4 presents the results of the investigation, and we conclude the paper with Section 5.

2. Hybrid Cellular Automata

Portions of this section are taken from the authors' paper "Preference-based Topology Optimization of Body-in-white Structures for Crash and Static Loads"[1].

The HCA algorithm [3,4,5,6] operates on the finite element mesh representation of the design space, in which each element is a binary decision variable. HCA belongs to the class of density-based topology optimization methods [2], for which the binary problem is relaxed and each element is assigned a continuous density variable. A frequently used material interpolation scheme is the solid isotropic material with penalization (SIMP) material model [8], according to which the Young's modulus of the material within an element is determined as:

$$E_i(\rho_i) = \rho_i^p E_0 \ , \qquad (1)$$

where ρ_i is the density of element i, E_0 is the Young's modulus of the full material, and p is a penalization exponent. However, this is only valid for a linear material model; therefore, the SIMP interpolation must be extended for an elasto-plastic material definition. For a piecewise linear elastic-plastic material model this can be formulated as [5]:

$$\sigma_{Yi}(\rho_i) = \rho_i^p \sigma_{Y0} \, , \; E_{hi}(\rho_i) = \rho_i^p E_{h0} \, , \qquad (2)$$

with the yield stress σ_{Y0} and the strain hardening modulus E_{h0} of the full material elements. The maximization of the energy absorption for the crash can be formulated as:

$$\begin{aligned} &\max_{\vec{\rho}} E_{\text{abs}}(\vec{\rho}) \\ &\quad s.t.: \vec{r}(\vec{\rho}, t) = 0 \\ &\qquad V(\vec{\rho}) = V_t \\ &\qquad\quad 0 < \rho_{\min} \leq \rho_i \leq 1, i = 1, \dots, N \, , \end{aligned} \qquad (3)$$

with the total energy absorbed by the structure $E_{abs}(\vec{\rho})$ by elastic and plastic deformation at the final time step t=$t_{\max}$ and the residual $\vec{r}(\vec{\rho}, t)$ of the dynamic finite element analysis.

The state of each cell is defined by its field variable S_i and its material density ρ_i. The optimization is heuristically addressed by applying a control based update rule aiming for a uniform distribution of the field variable in order to achieve an optimized material utilization. While not strictly minimizing the objective function in a mathematical sense, this nevertheless leads to useful designs from an engineering perspective, based on the idea of fully stressed design. In the design of crashworthiness structures, the maximum of the elemental Internal Energy Density (IED) is used [6]. A design update, respectively an update of the cell states, is obtained by:

$$\rho_i^{\text{new}} = \rho_i + K_{\text{P}}(S_i - S^*) \, , \qquad (4)$$

where K_P is a control parameter and S^* is a set-point for the field variables, which is adapted in each iteration so that the desired volume constraint holds. In order to avoid numerical instabilities and to impose a minimum length scale, smoothing of the field variables using a neighborhood rule and a cell memory is proposed in [5].

3. Bumper System

The bumper system's design space for topology optimization is shown in Figure 1, with a reference bumper design overlaid on the available design space for this study.

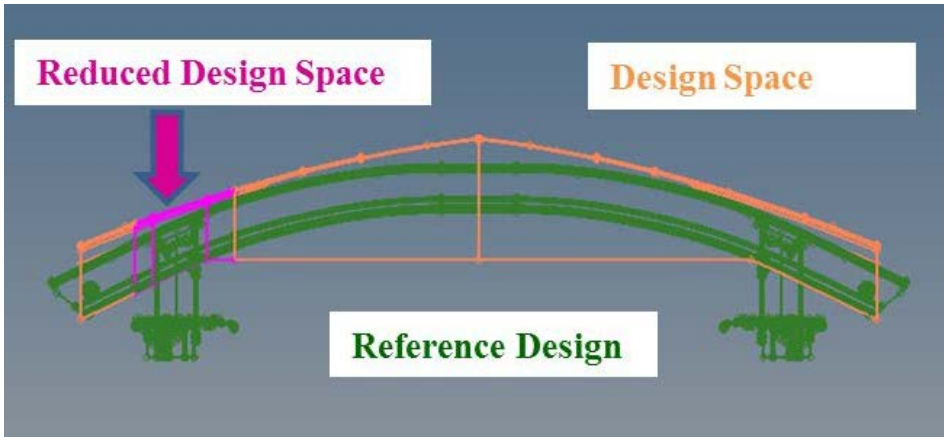

Figure 1: A typical vehicle front bumper system compared to the defined design space for topology optimization. (Top View).

In a structure such as this, the dimension along the extrusion constraint is much larger than the dimensions of the cross section. Applying extrusion constraints to the topology optimization severely limits the design freedoms and can possibly lead to overly trivial solutions. In order to reduce the effect of the extrusion constraint, which is necessary to achieve a manufacturable structure, the design space considered is reduced so that the dimension along the extrusion axis is roughly the same as the cross sectional dimensions. This, in effect, reduces the results to a two dimensional cross section, which is the desired result for such a structure.

The design space is defined using a VOXEL, or regularized, mesh so that each element in the design space is of the same volume. Since the individual element material properties are the design variables, defining the elements to have a uniform volume will allow the algorithm to properly distribute the material. The design space geometry and the FE representation are shown in Figure 2.

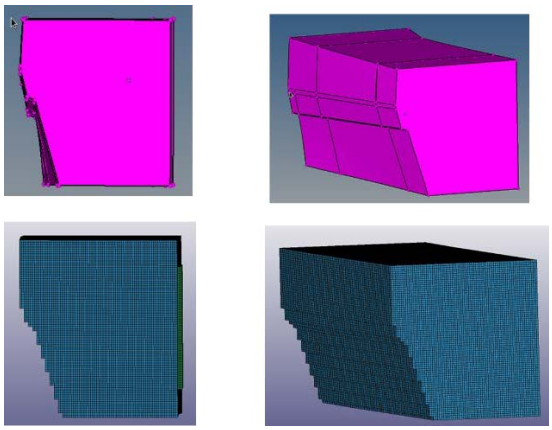

Figure 2: The Design Space defined geometry (Top) as compared to the regularized mesh representation (Bottom).

The extruded cross section will require a very fine mesh to be adequately represented, so the regularized mesh size is 1.5 mm x 1.5 mm x 1.5 mm. With this small mesh size, the algorithm will require small steps between iterations so that proper material distribution can be calculated.

Three load cases are defined to represent the desired loading of the bumper system. These models are solved using the LSDYNA explicit solver [9]. The load case of interest is a flat crush mode. Two additional load cases are defined to represent the possibility of rotational loading from downward or upward impacts such as those that may be induced from engaging impacting vehicles with different ride heights. The defined load cases are shown in Figure 3.

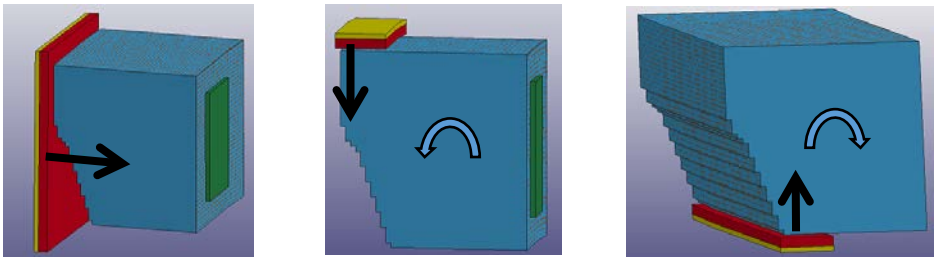

Figure 3: The defined load cases from left to right: Center, Upper, Lower.

4. Results

The optimization is performed in two stages. First, the load cases are considered separately and the structures are evaluated. Second, the optimization simultaneously considers multiple load cases. This resulting structure is then compared to the reference design to evaluate its performance. This reference design is an aluminium extrusion bumper system that was developed using a traditional design process, without the use of topology optimization techniques.

4.1 Single Load Case Optimizations

The HCA algorithm is available commercially through LSTC using the interface available through LS-TaSC [7]. Initially, the three load cases are defined in three separate optimizations in order to gain an understanding of the problem. For each load case, the mass fraction is defined at 6% of the original design space, and the variable move limit, which controls the amount of material adjusted between iterations, is set to a value of 0.01 due to the small mesh size (default value is 0.1). The initial results, shown in Figure 4, are fairly intuitive, and the convergence of the mass redistribution is shown in Figure 5.

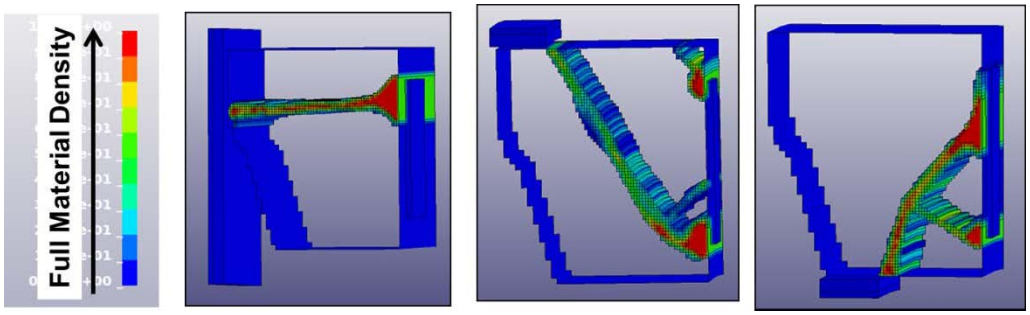

Figure 4: Topology Results for single case optimization Center, Upper, and Lower Load cases.

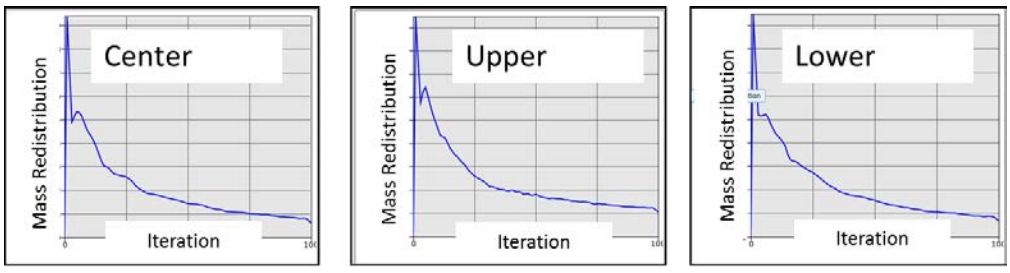

Figure 5: Convergence of the single case optimization runs (Mass Redistribution Center, Upper and Lower load cases).

Each result is then evaluated and compared to the reference design in order to measure the performance with respect to the energy absorbed by the structure normalized by the mass. Results of the single case optimization study are shown in Table 1.

Table 1: Results for single load case optimizations.

	Center				Lower				Upper			
	EA	m	EA/m	%	EA	m	EA/m	%	EA	m	EA/m	%
Reference Design	1.00E+00	1	1.00E+00	---	1.00E+00	1	1.00E+00		1.00E+00	1	1.00E+00	---
Single Load Case	1.84E+00	0.998	1.85E+00	85%	3.32E+00	0.998	3.33E+00	233%	1.06E+00	0.998	1.06E+00	6%
Combined from Single Load Case Combined	2.72E+00	1.697	1.60E+00	60%	2.82E+00	1.697	1.66E+00	66%	1.87E+00	1.697	1.10E+00	10%

The single load case designs perform very well for the specified load cases. However, since each design only considers one load case, the performance for other load cases is inadequate. Each topology design is very narrowly focused, and will not perform well for load cases not considered.

An expansion of the single load case design is a superposition of the designs developed considering only single load cases. This structure is evaluated as a full density design. This is done by post processing the optimized structure so that intermediate densities are considered either full material or void. Figure 6 shows the superimposed structure at full density, and Table 1 shows the results as compared to the reference design.

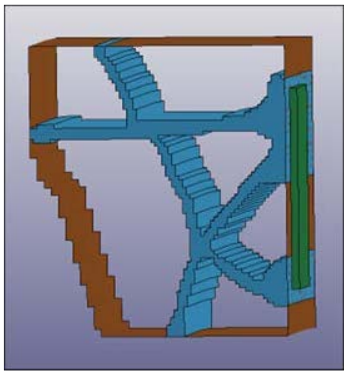

Figure 6: Superposition of single load case designs: Full density.

Although this design is significantly heavier than the reference design, it does show an improvement with respect to energy absorbed per unit mass for all load cases.

4.2 Results: Multiple Load Cases

LS-TaSC allows a user to define an optimization considering several load cases simultaneously therefore generating a more efficient, robust design. Again, due to the small mesh size, the move limit was reduced to a value of 0.01. In order to avoid one load case from dominating the solution, dynamic weighting is applied by defining constraints for each load case. This allows the weights for each load case to be based on defined criteria at each iteration. This metric is evaluated at each iteration for all load cases so that a balanced design is the result. Details are described in the LS-TaSC Users' Manual [7]. In this optimization, load requirements based on the performance of the reference design are used as the constraints. These constraints are based on the maximum contact force measured for each load case for the reference design. These values are then scaled down by a given factor to avoid over-constraining the optimization.

The development of the topology results are shown in Figure 7, and the iteration performance with respect to the defined constraints are shown in Figure 8. The algorithm did solve for a converged solution, but in order to meet the defined constraints, additional mass is necessary. A solution that both meets the aggressive mass fraction of 6% as well as meeting the constraints is not obtained due to convergence problems. The result contains mostly intermediate density elements, which is not a feasible design.

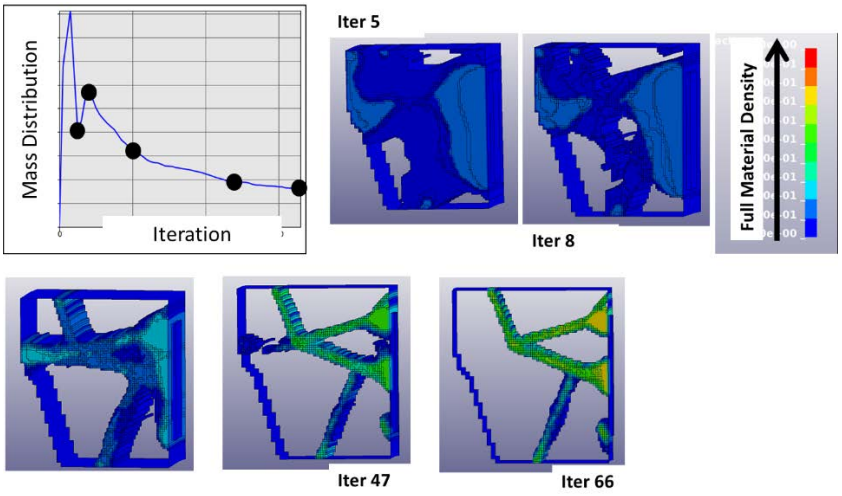

Figure 7: Progression of the Multi Load case Optimization.

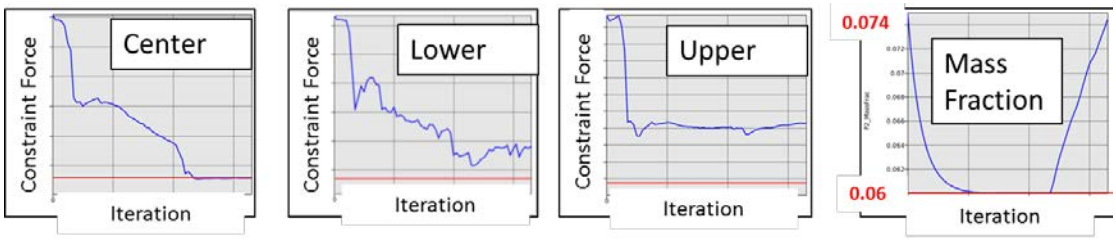

Figure 8: Iteration performance compared to the defined constraint for all load cases as well as the mass fraction.

Since the algorithm adds mass to the converged solution, the normalized energy absorption does not meet the performance target of the reference design. The results of the multiple load case optimization are summarized in Table 2.

In order to generate a more meaningful structure, the mass fraction is increased so that the algorithm has more freedom in the development of the design. Figure 9 shows the topology evolution with a modified mass fraction of 18%. Similarities are noted with the design derived by combining the single load cases shown in Figure 6, but a significant improvement in overall performance is noted.

Table 2: Performance of the multi load case design with increased mass fraction.

	Center				Lower				Upper			
	EA	m	EA/m	%	EA	m	EA/m	%	EA	m	EA/m	%
Reference Design	1.00E+00	1	1.00E+00	---	1.00E+00	1	1.00E+00		1.00E+00	1	1.00E+00	---
Multiple Load Cases MF=6%	7.13E-01	1.136	6.27E-01	-37%	1.58E+00	1.136	1.39E+00	39%	2.36E+00	1.136	2.08E+00	108%
Multiple Load Cases MF=18%	4.40E+00	1.873	2.35E+00	135%	5.15E+00	1.873	2.75E+00	175%	6.04E+00	1.873	3.22E+00	222%

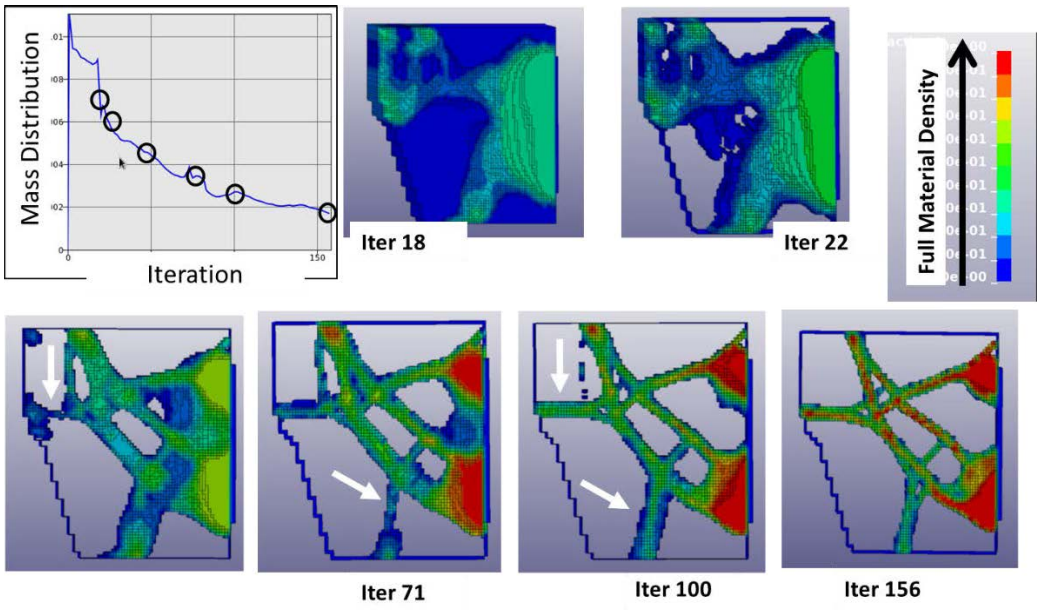

Figure 9: Evolution of the topology using multiple load cases and increased mass fraction.

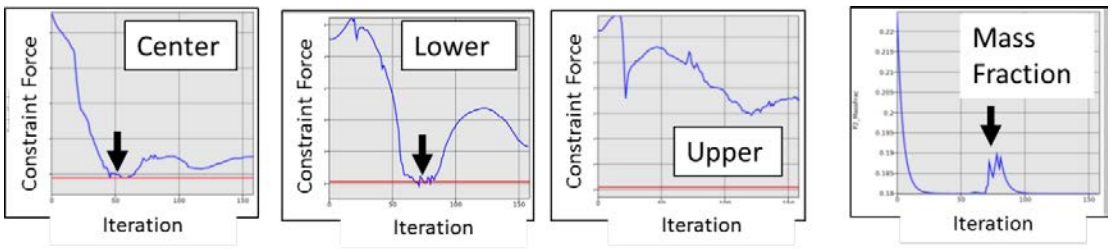

Figure 10: Iteration performance compared to combined constraints for all load cases with increased mass fraction

With several iterations due to the small move limit and a larger mass fraction, the resulting design performs very well for energy absorption. Table 2 highlights the results for the final topology design. As can be seen, the normalized energy absorption of the optimized design is a significant improvement over the reference design, as well as the performance of the design developed by combining the single load case results.

5. Conclusion

This investigation presents an approach to develop a design concept for an extruded bumper beam which is optimized for maximum energy absorption normalized by the mass of the structure. This is done by reducing the design space's dimension along the extruded direction to be similar to that of the cross

sectional dimensions. Defining multiple load cases leads to a more robust design than only defining a single load case. Dynamic weighting is also used in order to avoid any one load case dominating the solution. Additionally, the mass fraction defined needs to be sufficient so that the algorithm is able to develop a converged solution which meets all the defined requirements. Although the mass fraction may be higher than the final design requirement, subsequent shape optimization as well as the designer's interpretation can ultimately lead to a design which is informed by the topology solution and is more efficient than traditionally designed systems.

6. References

[1] Aulig, N., Nutwell, E., Menzel, S., Detwiler, D.: "Preference-based Topology Optimization of Body-in-white Structures for Crash and Static Loads", 14th International LS-Dyna Conference 2016.

[2] Sigmund, O. and Maute, K.: "Topology Optimization Approaches", Structural and Multidisciplinary Optimization, 48, Springer Berlin Heidelberg, 2013, 1031-1055.

[3] Tovar, A.: "Bone remodeling as a hybrid cellular automaton optimization process", Ph. D. thesis, University of Notre Dame, 2004.

[4] Tovar, A., Patel, N.,M. Niebur, G. L., Sen, M. and Renaud J. E.: "Topology optimization using a hybrid cellular automaton method with local control rules", Journal of Mechanical Design 128(6), 2006, 1205–1216.

[5] Patel, N. M.: "Crashworthiness design using topology optimization", Ph. D. thesis, University of Notre Dame, 2007.

[6] Patel, N. M., Kang, B.-S., Renaud, J. E. and Tovar, A.: "Crashworthiness design using topology optimization", Journal of Mechanical Design 131, 2009, 061013.

[7] Livermore Software Technology Corporation: "The LS-TaSC™ Software, Topology and Shape Computations Using the LS-Dyna Software, User's Manual", Version 3.0, from: www.lspoptsupport.com, 2013.

[8] Bendsøe, M.: "Optimal shape design as a material distribution problem", Structural optimization 1, 1989, 193–202.

[9] Livermore Software Technology Corporation: "The LS-DYNA Keyword Users' Manual Vol.I " Version 8.0, from: www.lstc.com/downlaod/manuals, 2016.